36"x60" Metal Capture Downdraft Table

Tool Manual - Safety, Operation and Maintenance

SAVE THIS DOCUMENT, EDUCATE ALL PERSONNEL

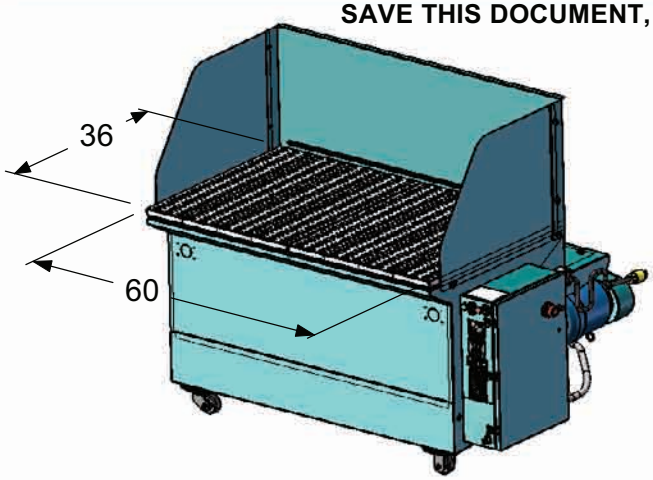

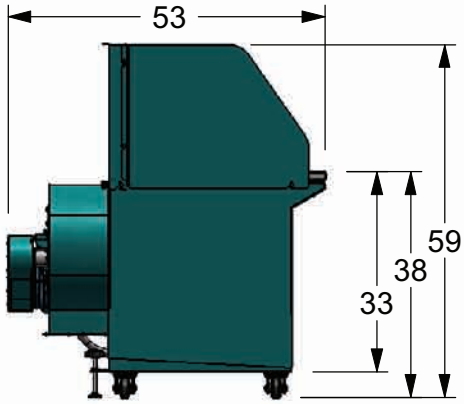

Model Number	Motor hp	Voltage	Frequency	FLA	Phase	Air Flow	Sound Level	Working Area Width	Working Area Length	Height	Exhaust	Shipping Weight
64400	3	230	60 Hz	6	3	1800 CFM	85 dB(A)	36"	60"	33"	Down	700 lbs
64401	3	460	60 Hz	3.3	3	1800 CFM	85 dB(A)	36"	60"	33"	Down	700 lbs
64402	3	230	60 Hz	6	3	1800 CFM	85 dB(A)	36"	60"	33"	Up	700 lbs
64403	3	460	60 Hz	3.3	3	1800 CFM	85 dB(A)	36"	60"	33"	Up	700 lbs
64404	3	230	60 Hz	6	3	1800 CFM	85 dB(A)	36"	60"	33"	Side	700 lbs
64405	3	460	60 Hz	3.3	3	1800 CFM	85 dB(A)	36"	60"	33"	Side	700 lbs

SAFETY LEGEND

⚠ WARNING
Read and understand tool manual before work starts to reduce risk of injury to operator, visitors and tool.

⚠ WARNING
Practice safety requirements. Work alert. have proper attire and do not operate tools under the influence of alcohol or drugs

⚠ WARNING
Eye protection must be worn at all times, eye protection to conform to ANSI Z87.1

⚠ WARNING
Ear protection to be worn when exposure to sound, exceeds the limits of applicable Federal, State or Local statues, ordinances and/or regulations

⚠ WARNING
Respiratory protection to be used when exposed to contaminants that exceed the applicable threshold limit values required by law

⚠ WARNING
Electric shock hazard. Avoid bodily contact with grounded objects, bodies of water. Do not damage cord set.

IMPORTANT SAFETY INSTRUCTIONS

When operating this equipment, basic precautions should always be strictly followed including the instructions listed below:

METAL CAPTURE DOWNDRAFT TABLE SAFETY INSTRUCTIONS

1. Always use a grounded power supply. There is an increased risk of electric shock with an ungrounded power supply.
2. Don't expose to rain or wet conditions. There is an increased risk of electric shock if the switch, cord or motor are wet.
3. Do not abuse the power cord. Never use the cord to move the station. Never use the cord to pull the plug out of the outlet. A damaged cord increases the risk of electric shock.
4. Disconnect switch must be off when servicing filter
5. Use caution when opening or closing guards, screens, etc. Switch power off and unplug cord before opening. Remove all work pieces and tools before opening to avoid injury. Keep fingers and hands clear when closing to avoid injury
6. Never use to exhaust chemical vapors
7. Vibration may occur if unit is not level.
8. Unplug power cord when accessing blower compartment area

Metal Capture Downdraft Table Machine Setup

The 64400 Series Metal Capture Downdraft Table will be pallet shipped to its destination. The following details will describe the steps required for initial machine setup before operation. Read through the entire setup procedure to understand its requirements before trying to run machine.

Warning:
Failure to follow the required steps for machine setup may result in damage to machine or personal injury.

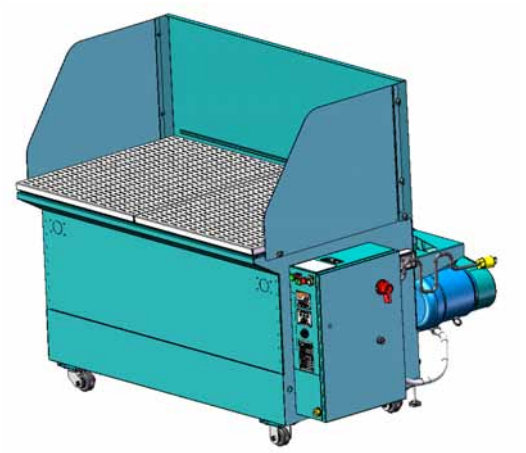

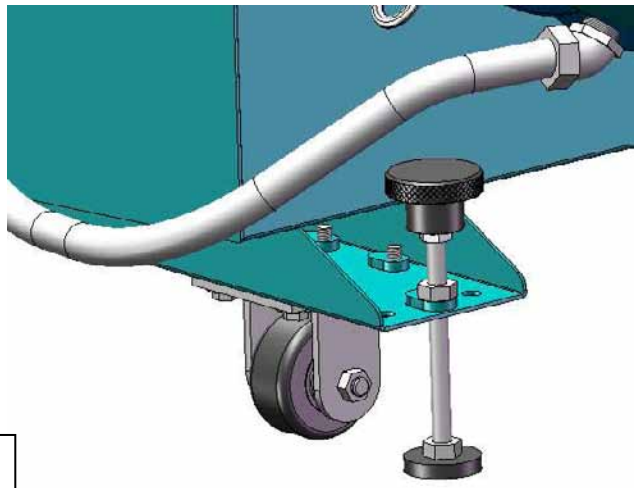

1

Before removing your machine from the pallet, locate the casters and related hardware provided. Installing these casters can be done as you are removing the machine from the palette via an overhead crane or palette truck. Qty 2 swivel casters and qty 2 rigid casters are provided for mounting. Mount two rigid casters at one end and two swivel casters at opposite end.

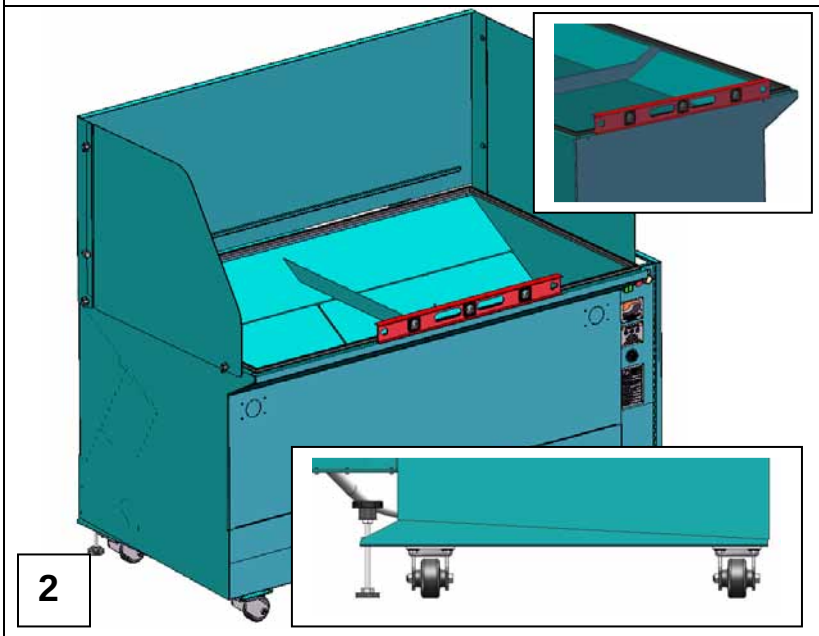

2

The next step is to level the machine. Having the machine level is crucial for the auto-fill sensor to operate properly, maintaining critical water level for proper filtration. After determining machine location and with work surfaces removed, utilize a level off the rigid top edges of the machine. Block and shim off the flat of the caster legs located at the base of the assembly to provide a level machine on all four sides. Machine to be no more than 1/16” out of level over any 3-foot span.

3

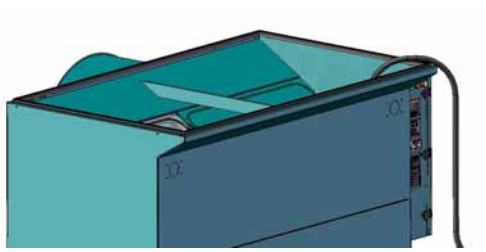

You must now fill your tank to the proper start up water level. For initial setup, manually filling the tank is suggested. Use a garden hose from your water source and drop to the bottom of the tank before beginning to fill.

4

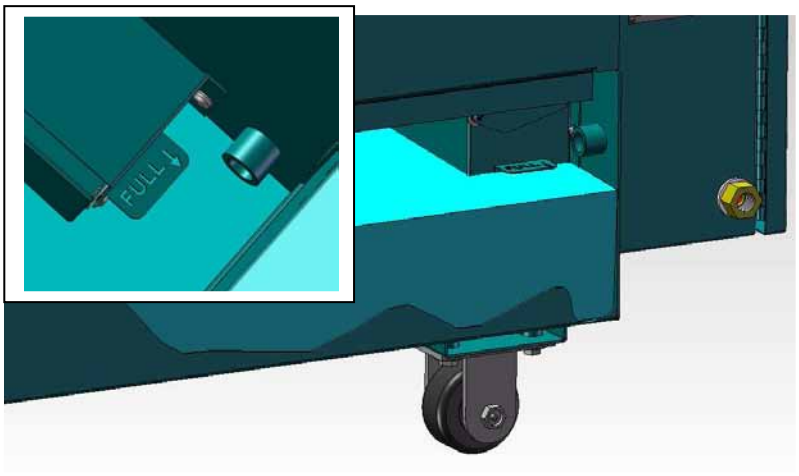

Detail A

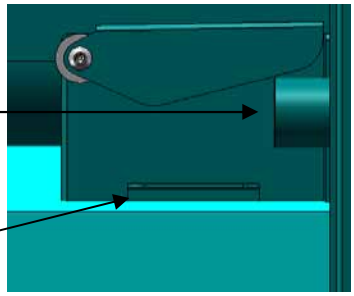

Emergency Overflow

¼”

There is a “Full” tab located on the isolation chamber, which indicates the proper fill level for the machine in the “OFF” position. Continue filling the machine until the water is approximately ¼” short from the bottom surface of the fill tab as shown in Detail A.

Do not allow the water to fill higher than this full tab. If level is greater than height of tab, proceed to remove water from machine until desired height is reached as indicated above. CAUTION: If machine is overfilled past the fill tab by more than 3/8”, water will begin to exit from the emergency overflow and on to the shop floor.

Once the desired has been reached, remove hose from tank and place your work surfaces into position.

Note: The machines auto-fill system will bring the water level up to exact run height (Full), after the machines disconnect is turned to the “On” position as described in Step 8 of the **Machine Setup**. Ensure that the water in main collection tank is at the proper height before beginning operation of machine.

5

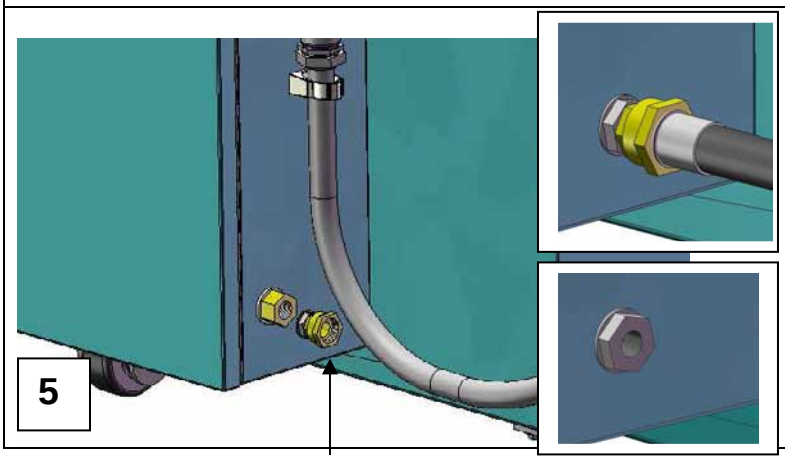

The machine is equipped with a self-filling water level system, which requires a constant water supply. The machine comes with a ¾” female garden hose swivel connect located at the rear of the machine or you can remove the brass garden hose swivel connect and use the ¼” NPT female bulkhead fitting for providing a water source.

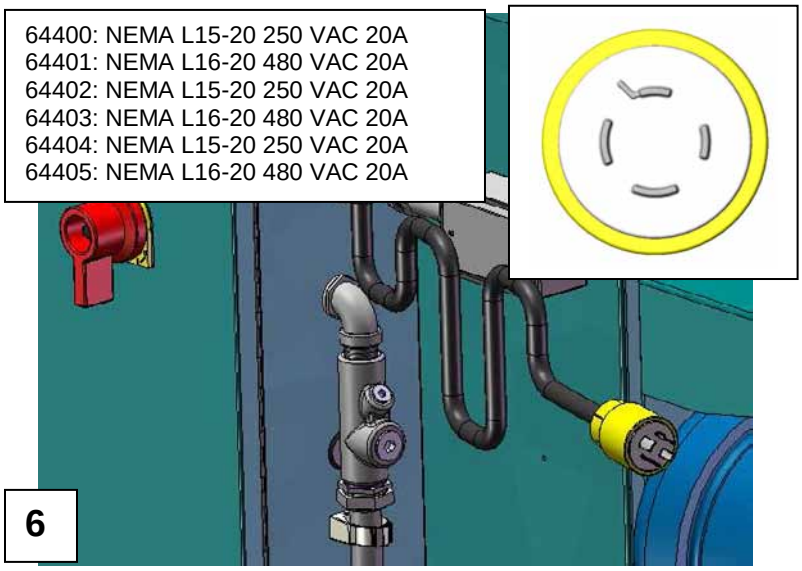

Next you will need to provide a power source for your machine. Refer to the parts page, as the model number will be used for determining the voltage rating for your specific machine.

Warning:
DO NOT attempt to wire the machine for any other voltage other than that stated for your model. There are internal components to the control box that are voltage specific and failure to provide proper voltage can cause damage to your machine and could cause personal injury.

Model: 64400, NEMA L15-20 shown

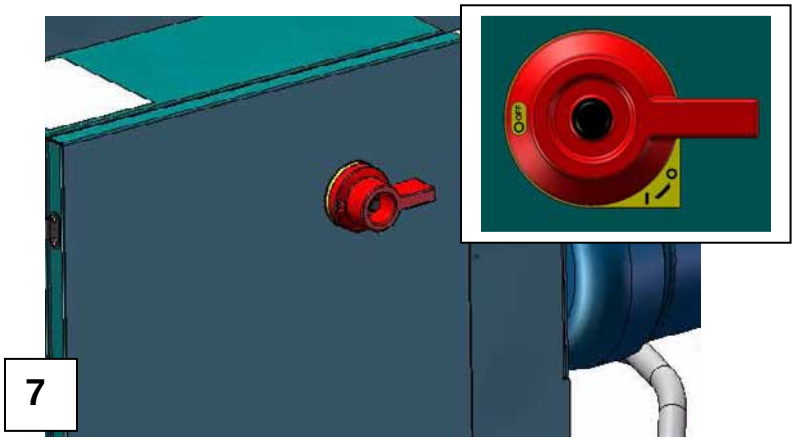

Before plugging in your machine, be sure that the lockout disconnect is in the “Off” position.

Note:
The disconnect is used as a lockout mechanism. For any maintenance required inside the control box, the disconnect will need to be in the off position to open the access door. If the disconnect is in the on position, the access door will remain locked.

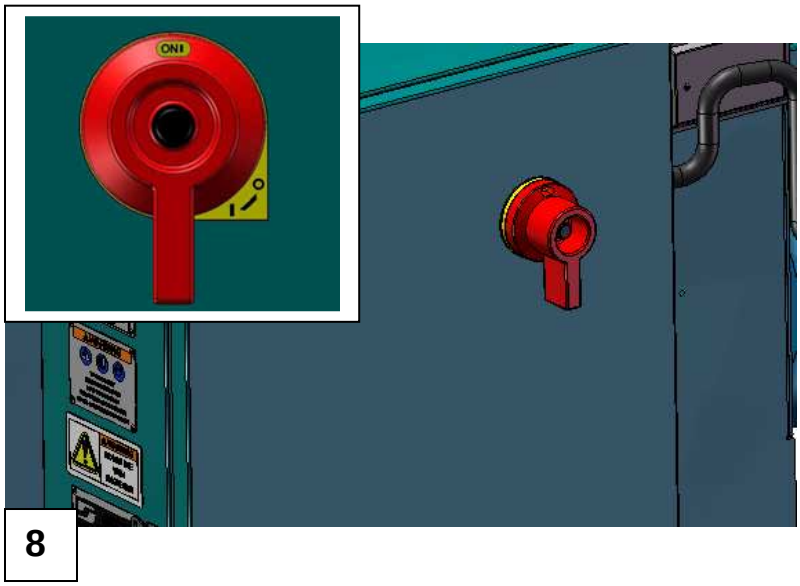

After plugging your machine in, proceed to move the lockout disconnect to the “On” position, providing power to the machine and sensory controls. Once power has been provided, the green pilot light will start a flashing sequence for a 25 second set-up stage. The auto-fill system will take over after the set-up stage is complete and bring the machines water level to the correct height before allowing the operator to turn on the machine. At the time the green pilot light glows solid, the machine is then ready to start.

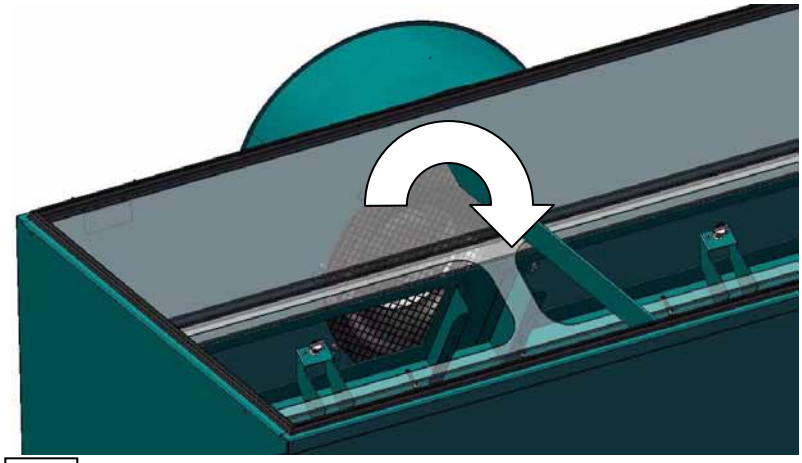

9

It is also important to recognize when wiring your machine, proper rotation of the impeller is essential for operation. Before turning machine on, remove the access covers and mist traps from the machine, giving access to a view of the inlet ring and impeller assembly. Impeller should rotate in a clockwise direction from this side of the machine as shown. If impeller is rotating counter-clockwise, interchange any two of the main power leads from the 3 phase supply.

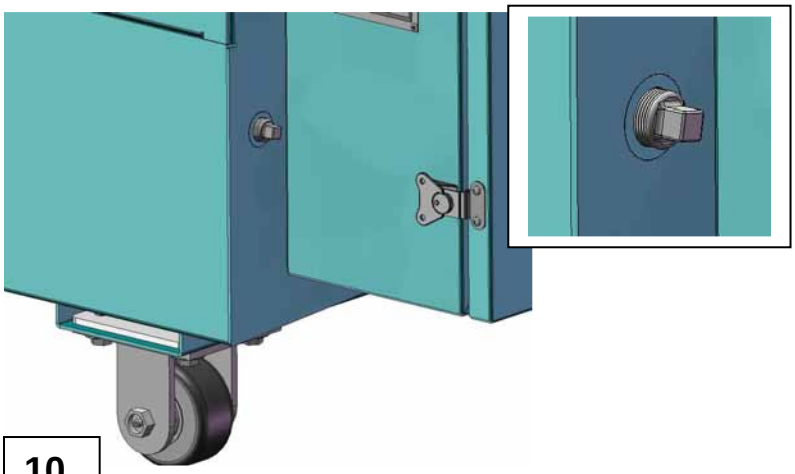

10

Located at the front of the machine is an emergency overflow outlet. The machine is shipped with a plug which must be removed before operating. The plug should only be used for transporting a water filled machine from work center to work center, reducing the splash out during transfer.

The ½" female NPT emergency outlet provided was designed to allow water to drain from tank if desired run level was to become too high. A hose to a local floor drain is recommended.

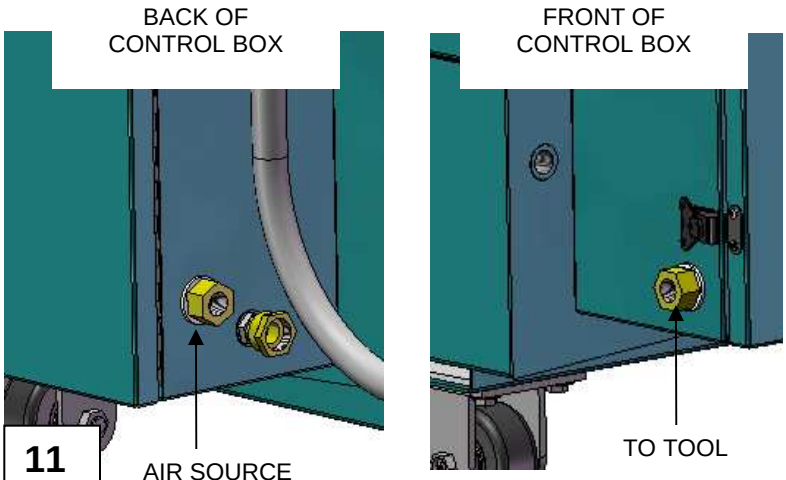

11

The machine is provided with a pneumatic interlock. The interlock will only provide air to the working tool after the machine has reached optimal run speed.

Air source: ½" NPT fitting
To Tool: ½" NPT fitting

Maximum airflow: 95 SCFM

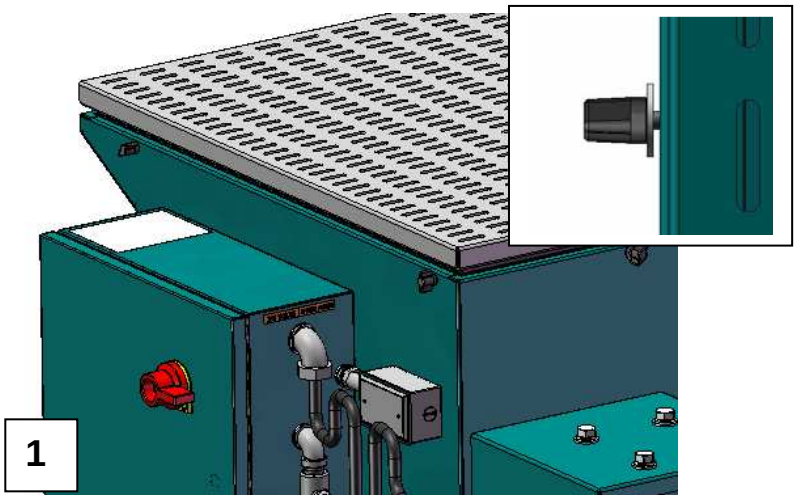	To begin installing the machines shielding assembly, screw qty 6 locking knobs into the threaded holes located around the perimeter of the main tank. The two rear knobs will have a steel washer for locking down the rear panel. Leave a 1/8” gap as shown at all 6 locations, to allow for the installing of the rear and side panels.
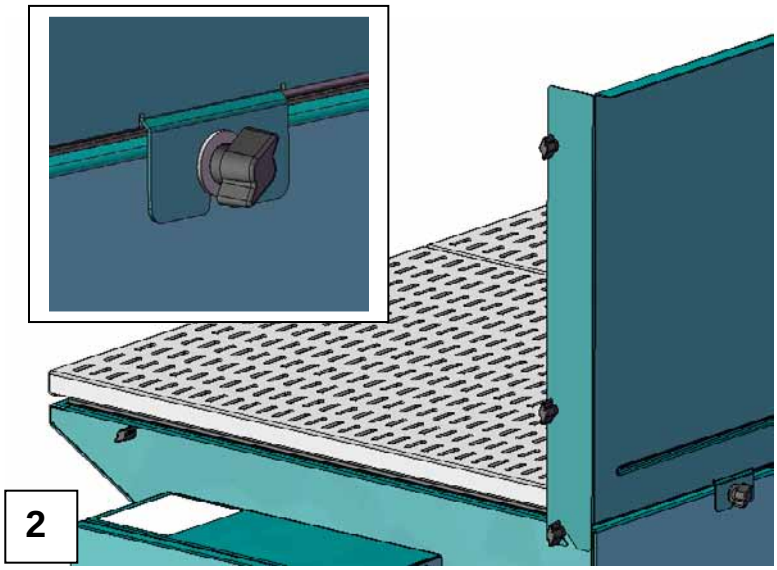	Slide the rear panel into place first. Be sure that the washer remains on the outside of the sheet metal tab as shown. Snug up the four knobs associated to this rear panel but do not tighten down completely at this time. Add the remaining 4 lockdown knobs to the pre-threaded holes located on the return legs of the rear panel. These knobs will be used for locking down the side panels. Remember to leave a 1/8” gap for sliding the side panels into place.
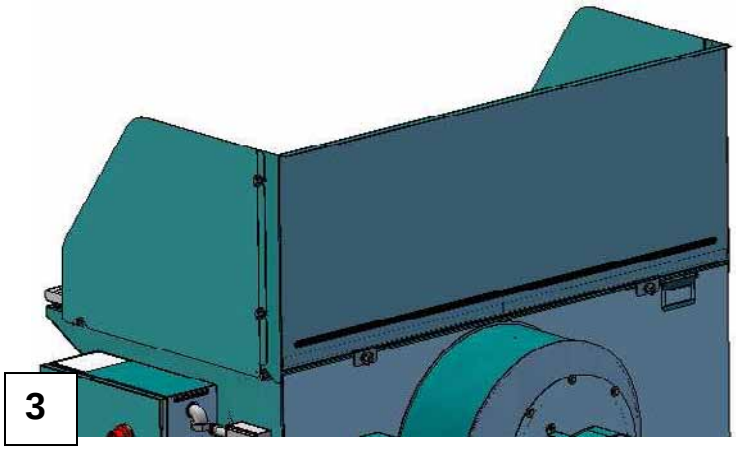	Slide both left and right panels into place and lock down until hand tight. Continue by hand tightening all lock down knobs down. Note: The work surfaces can be removed with shielding in place. Disassembly is not required for maintenance.

 1 “Start” Button	Once the green pilot light glows constant, you can then turn on the machine. Press and release the “Start” button. The machines impeller will reach its optimal operating speed in approximately 10 seconds and air filtration will begin. You can now begin to grind your work piece.
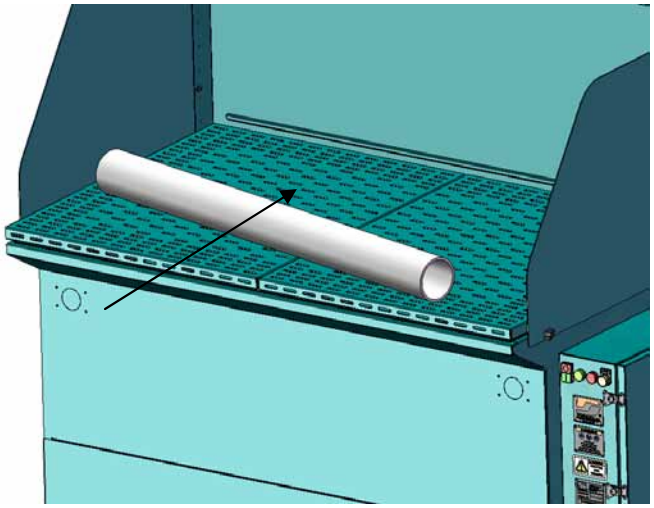 2	Direction of grind is very important when speaking to maximum dust collection. Be sure to manipulate both your work piece and tool to insure that the table is capturing the highest percentage of both metal fillings and small metal particles or dust. When possible, direct grind towards shielding for maximum capture rate. **NOTE:** The machine is provided with a pneumatic interlock. The interlock will only provide air to the working tool after the machine has reached optimal run speed.

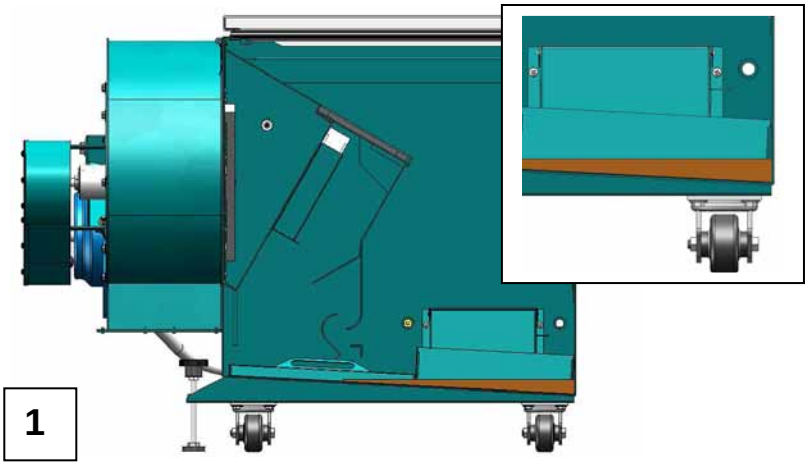 1	After machine use, sludge will collect in the clean-out pans located at the bottom of the tank. After each day of use, sludge should be removed and transported in a covered, vented steel container for storage or disposal in accordance with federal, state and local regulations-Sludge containing aluminum should be mixed with an inert material (dry clay) in the ratio of 5 parts inert material to 1 part sludge.
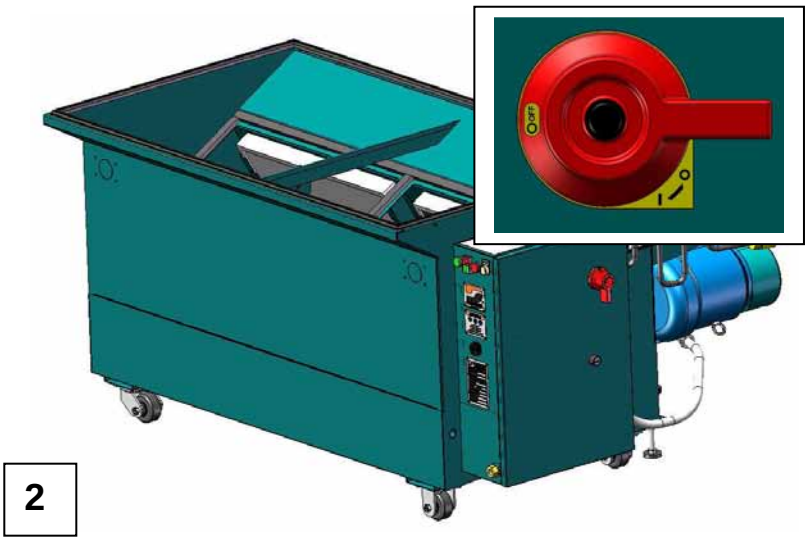 2	Before beginning any maintenance to your machine, first make sure the lockout disconnect is in the off position. Remove both work surfaces to gain access to the interior of the tank.
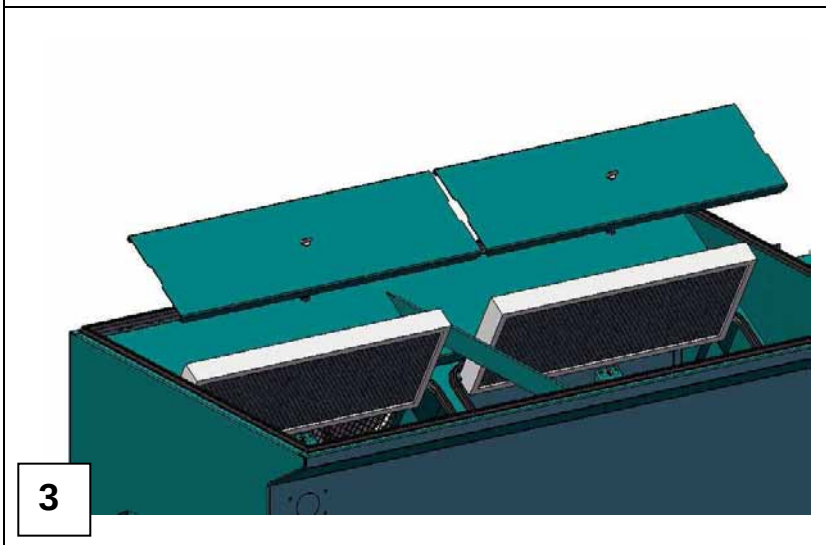 3	Continue by removing both access panels and mist traps. After 30 days of use, remove mist traps from Metal Capture Table, rinse with clean water to remove any trapped sludge or debris. Once clean, re-install mist traps before operation of machine. Inspect mist traps for signs of corrosion or damage. Replace if any corrosion or damage is found.

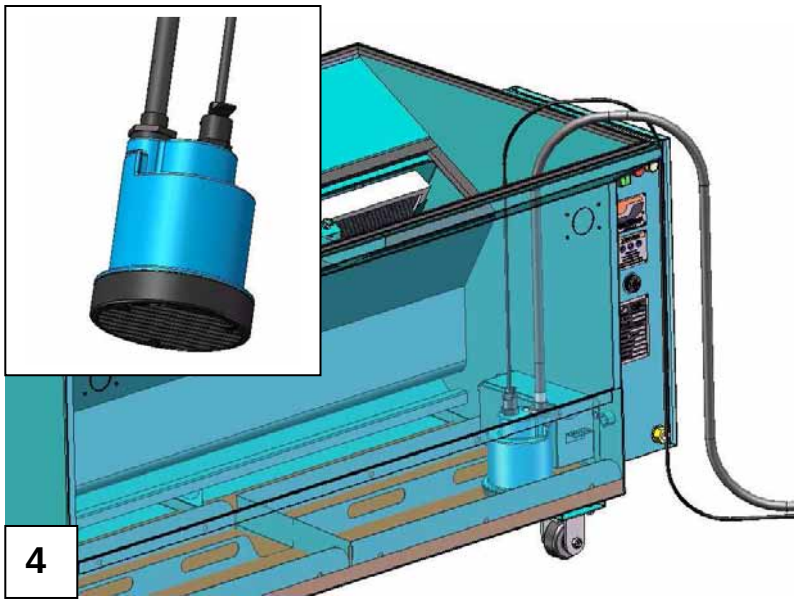

Use a utility pump to drain the water out of the machine.

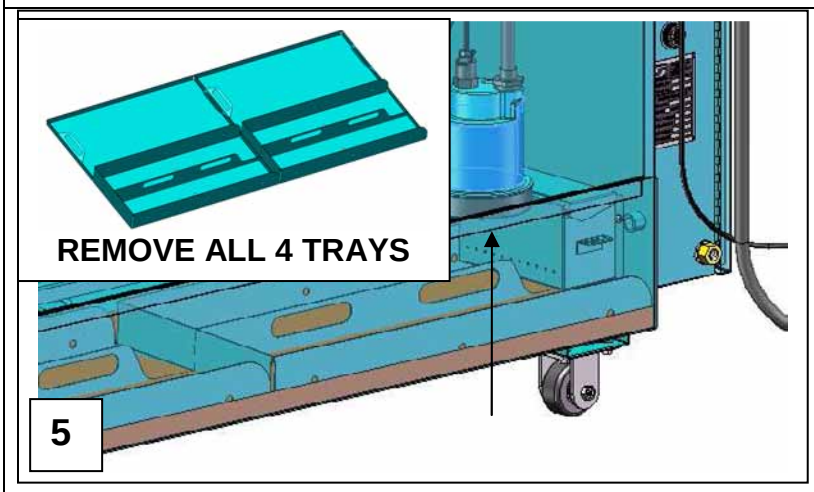

After draining all water, remove the pump. Continue by removing the collection trays and use a small flat non-sparking shovel to remove the remaining sludge from both the tank and collection trays.

Adhere to local codes to properly dispose contaminated liquids/sludge.

Hose clean and re-install mist traps and collection trays back into machine and lock down access panels.

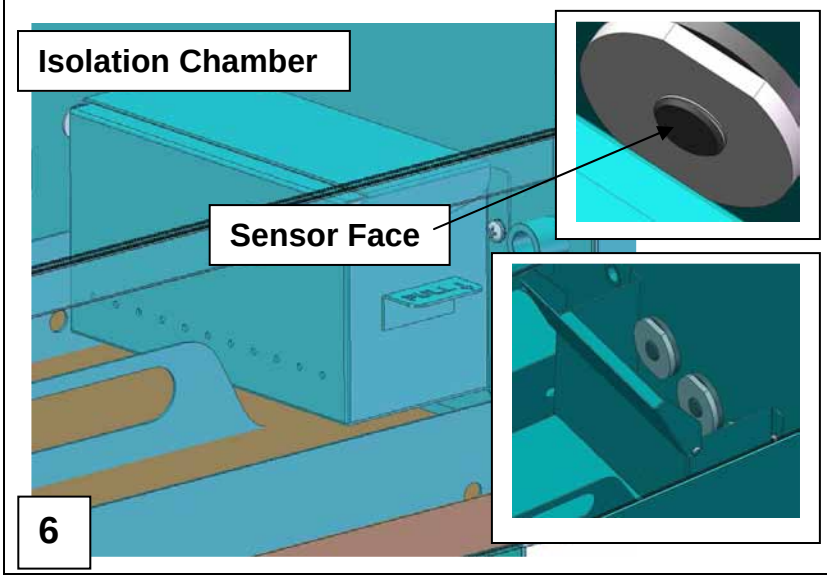

Keeping the liquid level sensors clean from sludge and debris is very important in maintaining the machines proper water level both in “On” and “Off” mode.

Located in the isolation chamber, open lid and use a damp cloth to clean the face of each sensor after each day of use, removing any grind build-up or foreign debris that has accumulated.

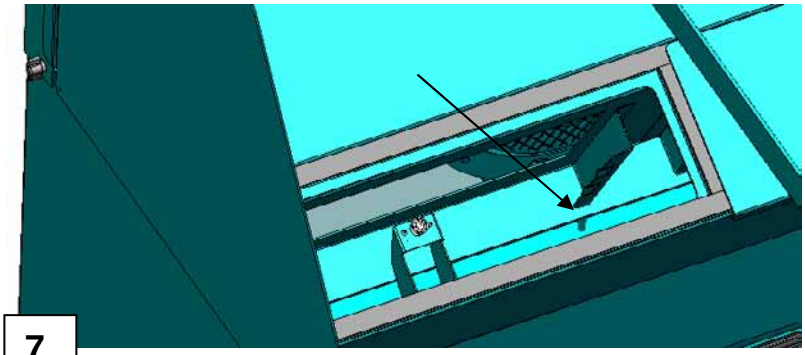 7	In addition to the base of the tank and the collection trays, you must also make sure that the overflow drain is clear of any debris as well. Remove access panel and mist trap to locate and allow access to the drain tube as shown at the arrow in the detail.
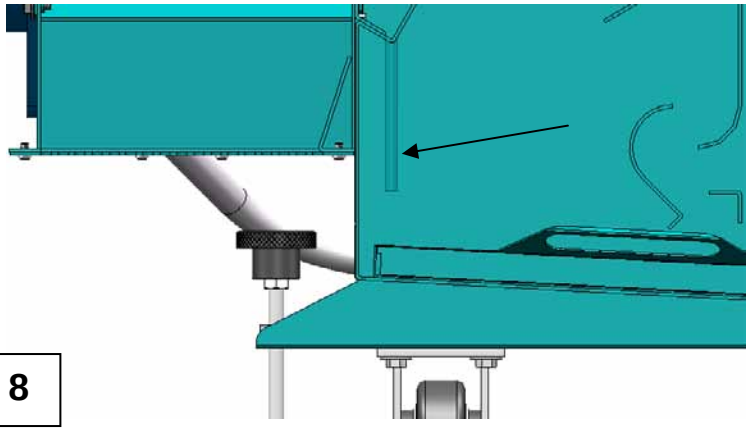 8	As shown in this section view, the drain tube is located at the rear of the assembly.
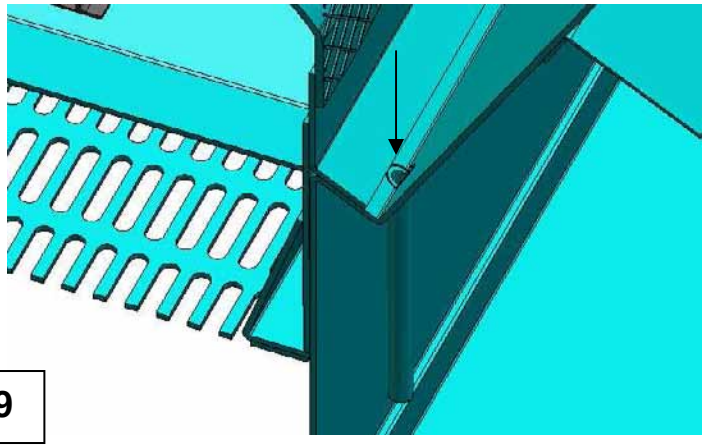 9	Use a rigid tool of choice to slide through the ID of the tube, making sure there is no build-up of any kind.
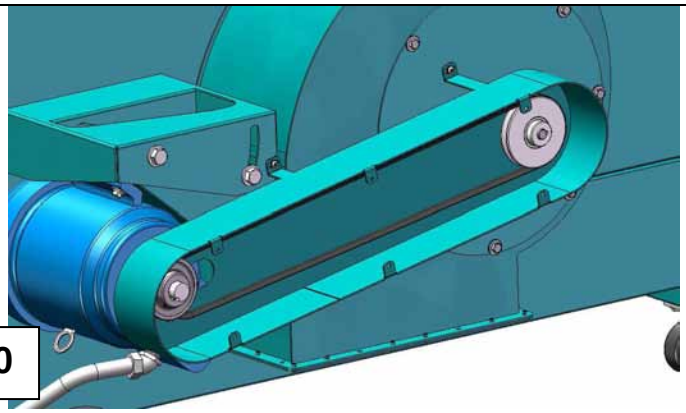 10	After 180 days of use Inspect the V-belt and replace if worn or damaged.

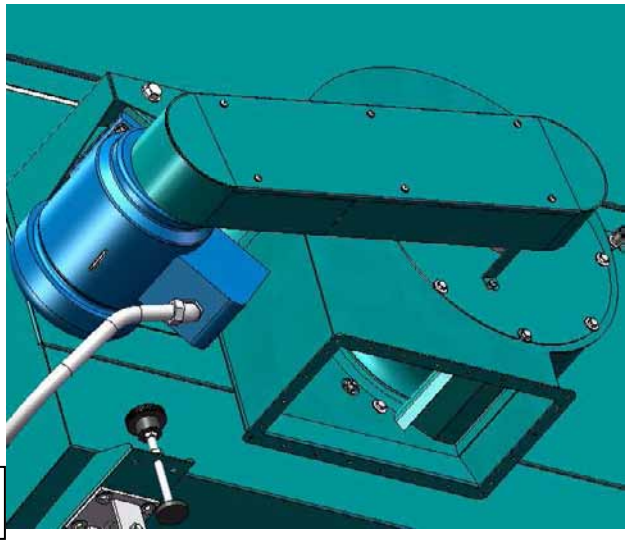

11

After each day of use, inspect the Metal Capture Table exhaust vent, internal and external surfaces and surrounding work area for any fugitive dust accumulation exceeding 1/32” thickness- remove with non-sparking, conductive dustpans and natural bristle brushes.

Inspect exhaust for accumulated dust. Remove grate and clean if dust exceeds 1/32”.

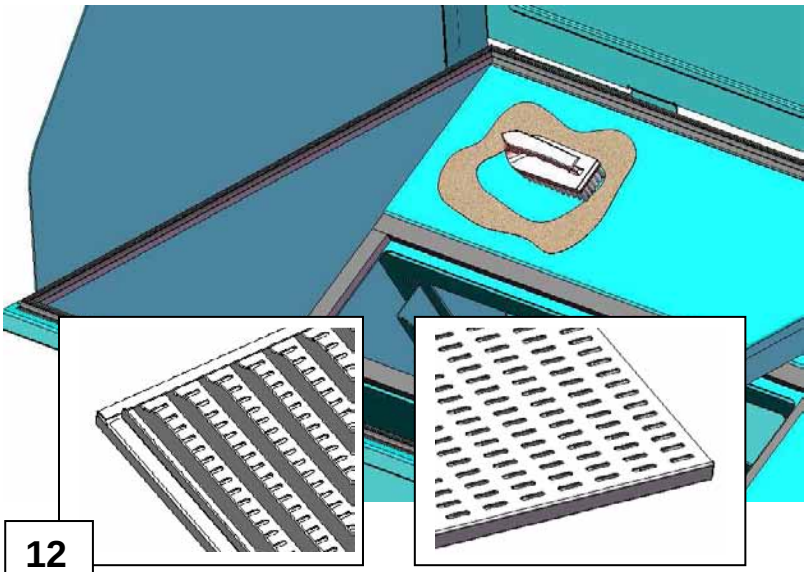

12

Continue by inspecting the interior and exterior of the assembly. Clean as necessary, based of 1/32” max accumulation.

Be sure to inspect and clean work surfaces top and bottom as well.

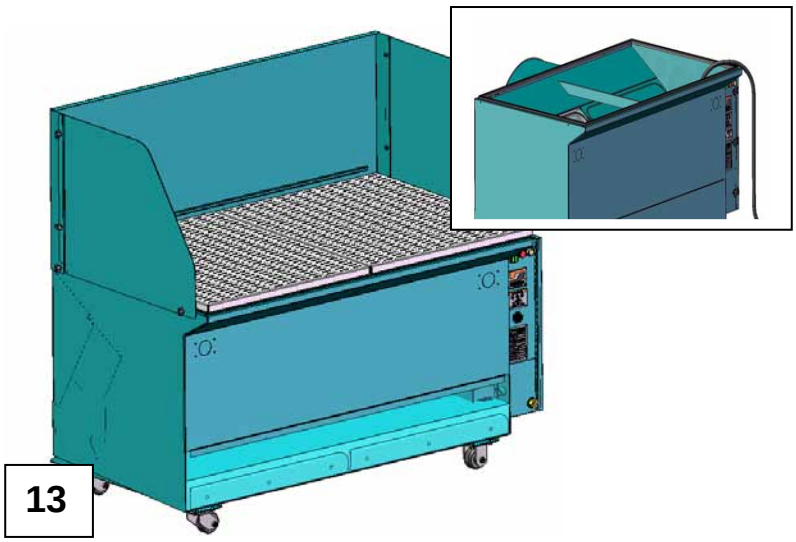

13

After every 30 days of use, replace the water in the collection tank with clean water- Dispose of used water in accordance with federal, state and local regulations.

Follow the **Machine Setup** for re-filling your machine and start-up.

Metal Capture Downdraft Table Maintenance

Maintenance Schedule	Daily	Every 30 Days of use	Every 180 Days of use
Check Water Level	✓		
Remove sludge from collection tank	✓		
Remove any accumulated dust	✓		
Rinse mist traps with clean water	✓		
Replace water in collection tank		✓	
Inspect mist traps		✓	
Inspect V-Belt			✓
Clean Sensor Faces	✓		

Check Water Level:
Insure that water in main collection tank is at the proper height before beginning operation of machine.

Remove sludge from Collection Tank:
Sludge should be transported in a covered, vented steel container for storage or disposal in accordance with federal, state and local regulations- sludge containing aluminum should be mixed with inert material (dry clay) in the ratio 5 parts inert material to 1 part sludge.

Remove any accumulated dust:
Inspect the Metal Capture Station or Table exhaust vent, internal and external surfaces and surrounding work area for any fugitive dust accumulation exceeding 1/32” thickness- remove with non-sparking, conductive dustpans and natural bristle brushes.

Rinse Mist traps with clean water:
Remove mist traps from Metal Capture Station or Table and rinse with clean water to remove any trapped sludge or debris. Once clean re-install mist traps before operation of machine.

Replace water in collection tank:
Replace the water in the collection tank with clean water-Dispose of used water in accordance with federal, state and local regulations.

Inspect Mist Traps:
Inspect mist traps for signs of corrosion or damage. Replace if any corrosion or damage is found.

Inspect V-Belt:
Inspect V-Belt and replace if worn or damaged

Clean Sensor Faces:
Located in the isolation chamber, open lid and use a damp cloth to clean the face of each sensor, removing any grind build-up or foreign debris that has accumulated.

Power

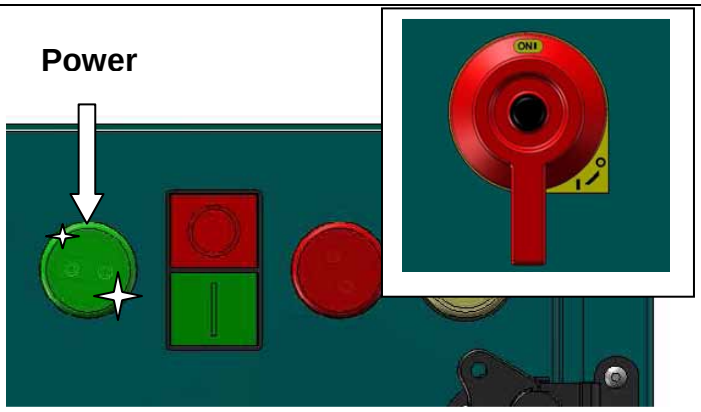

Ready to Start:

After plugging your machine in, proceed to move the lockout disconnect lever to the on position, providing power to the machine and sensory controls. Once power has been provided, the green pilot light will start a flashing sequence for a 25 second setup stage. Be aware, you will not be able to power up the machine during this flashing stage. Once the green pilot light illuminates solid, you can then power up the machine.

Note: Clean sensors are critical for the proper operation of this machines auto-fill system. Be sure to monitor and wash down sensors as required. Refer to Maintenance section for proper machine care.

Fault

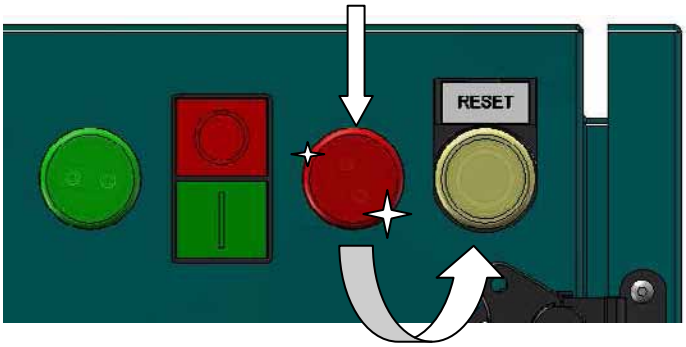

WARNING

If reset is required, proper water height is not being sensed. Check to make sure that water source is providing sufficient supply. Water level sensors may also require cleaning. Refer to manual on proper care and maintenance of machine. If machine continues to shut down, consult factory for further assistance.

Dynabrade: 1-800-828-7333

The red pilot light is used to signal different fault messages, depending upon its flash pattern.

A) Solid illumination:

Indicates that the water level is not sufficient for the Start-up of the machine. With proper water source connected, the machine will auto-fill to the correct sensory height. Once sensor is met, the solid red pilot light will dismiss and the green pilot light will illuminate solid, indicating it is back to the ***Ready to Start*** mode as indicated above.

B) Flash Pattern 1:
"ON" 3 seconds, "Off" 3 second:

During the above ***Ready to Start*** mode, the machine will allow the solenoid valve to open and fill the machine for a maximum of 10-minutes. If the ***Ready to Start*** sensor is not met in this 10-minute window, the machine will go into lockdown and will require a reset. Press the reset button briefly until it illuminates and then release. At this time, the machine will go back to the ***Ready to Start*** mode as indicated above.

C) Flash Pattern 2:
"ON" 1 second, "Off" 1 second:

Indicates that the machine has shut down. The water level is not sufficient in the run mode and the auto-fill has attempted to reach proper water level but has failed.

*The machine will now require a reset. Press the reset button briefly until it illuminates and then release. At this time, the machine will go back to the **Ready to Start** mode as indicated above.*

D) Flash Pattern 3:
"ON" 10 second, "Off" 1 second:

A motor overload will shut down the system and trigger this flashing sequence. At this time, a qualified electrician should determine why the motor overload was tripped and use of the machine should be stopped until the cause of overload is determined.

MODELS: 64400, 64402, 64404

PS1: PROXIMITY SENSOR (START UP LEVEL)
PS2: PROXIMITY SENSOR (RUN FILL SENSOR
PL1: PILOT LIGHT (MACHINE FAULT)
PL2" PILOT LIGHT (POWER ON INDICATOR)
SV1: SOLENOID VALVE
FD1: FUSED DISCONNECT
MC1: MOTOR CONTACTOR 45mm
OR1: OVERLOAD RELAY 45mm
PLC: PROGRAMABLE LOGIC CONTROLLER

TFR: TRANSFORMER 35mm
AUX1: AUXILLARY CONTACT
SB1/SB2: START BUTTON, NO/ STOP BUTTON
RB1: RESET BUTTON
F1, F2, F3: FUSE, 20a time delay
F4, F5: FUSE, 3a
F6: FUSE, 1a
DIN RAIL 35mm
RCD: RESIDUAL CURRENT DEVICE

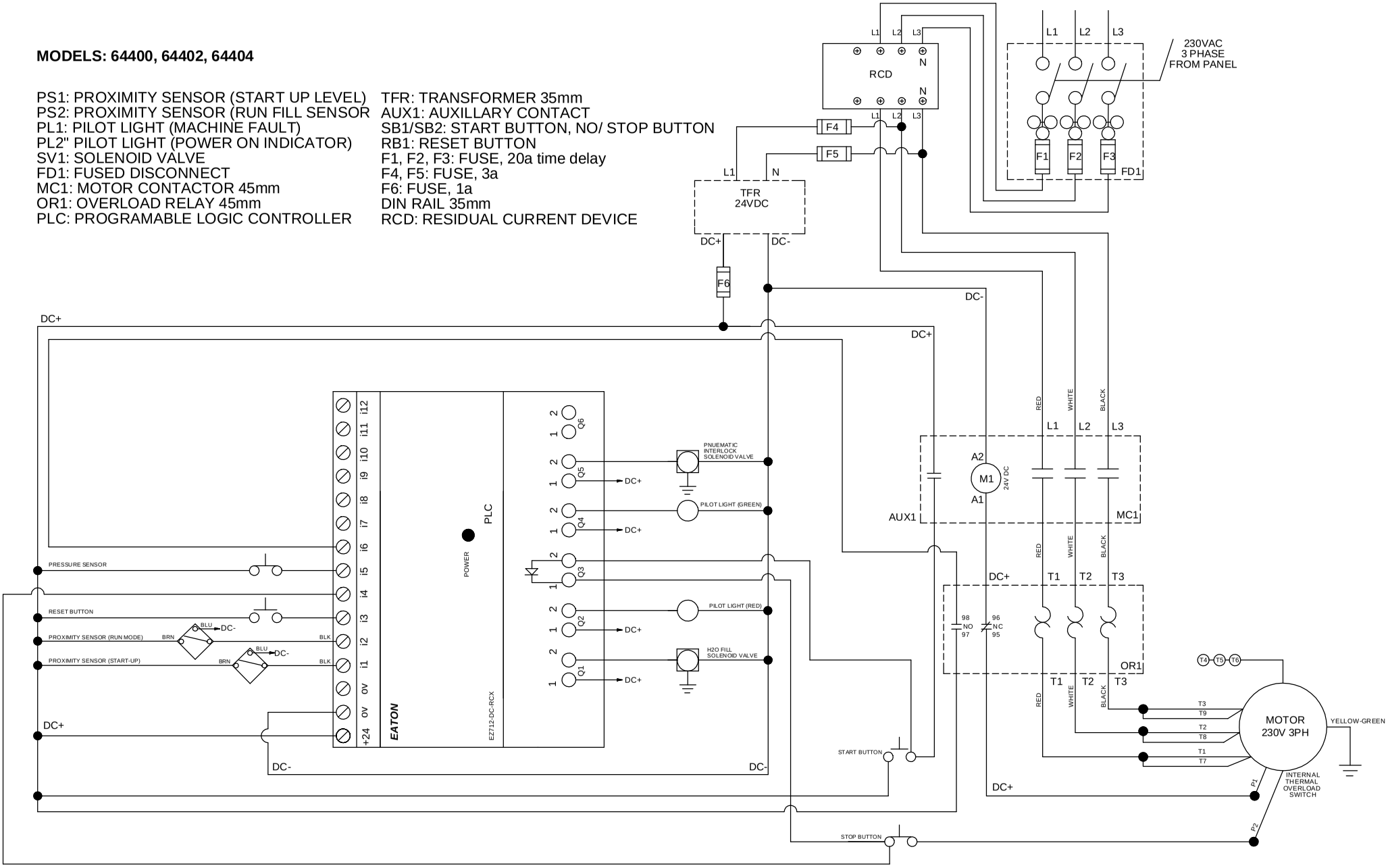

MODELS: 64401, 64403, 64405

PS1: PROXIMITY SENSOR (START UP LEVEL)
PS2: PROXIMITY SENSOR (RUN FILL SENSOR
PL1: PILOT LIGHT (MACHINE FAULT)
PL2" PILOT LIGHT (POWER ON INDICATOR)
SV1: SOLENOID VALVE
FD1: FUSED DISCONNECT
MC1: MOTOR CONTACTOR 45mm
OR1: OVERLOAD RELAY 45mm
PLC: PROGRAMABLE LOGIC CONTROLLER

TFR: TRANSFORMER 35mm
AUX1: AUXILLARY CONTACT
SB1/SB2: START BUTTON, NO/ STOP BUTTON
RB1: RESET BUTTON
F1, F2, F3: FUSE, 20a time delay
F4, F5: FUSE, 3a
F6: FUSE, 1a
DIN RAIL 35mm
RCD: RESIDUAL CURRENT DEVICE

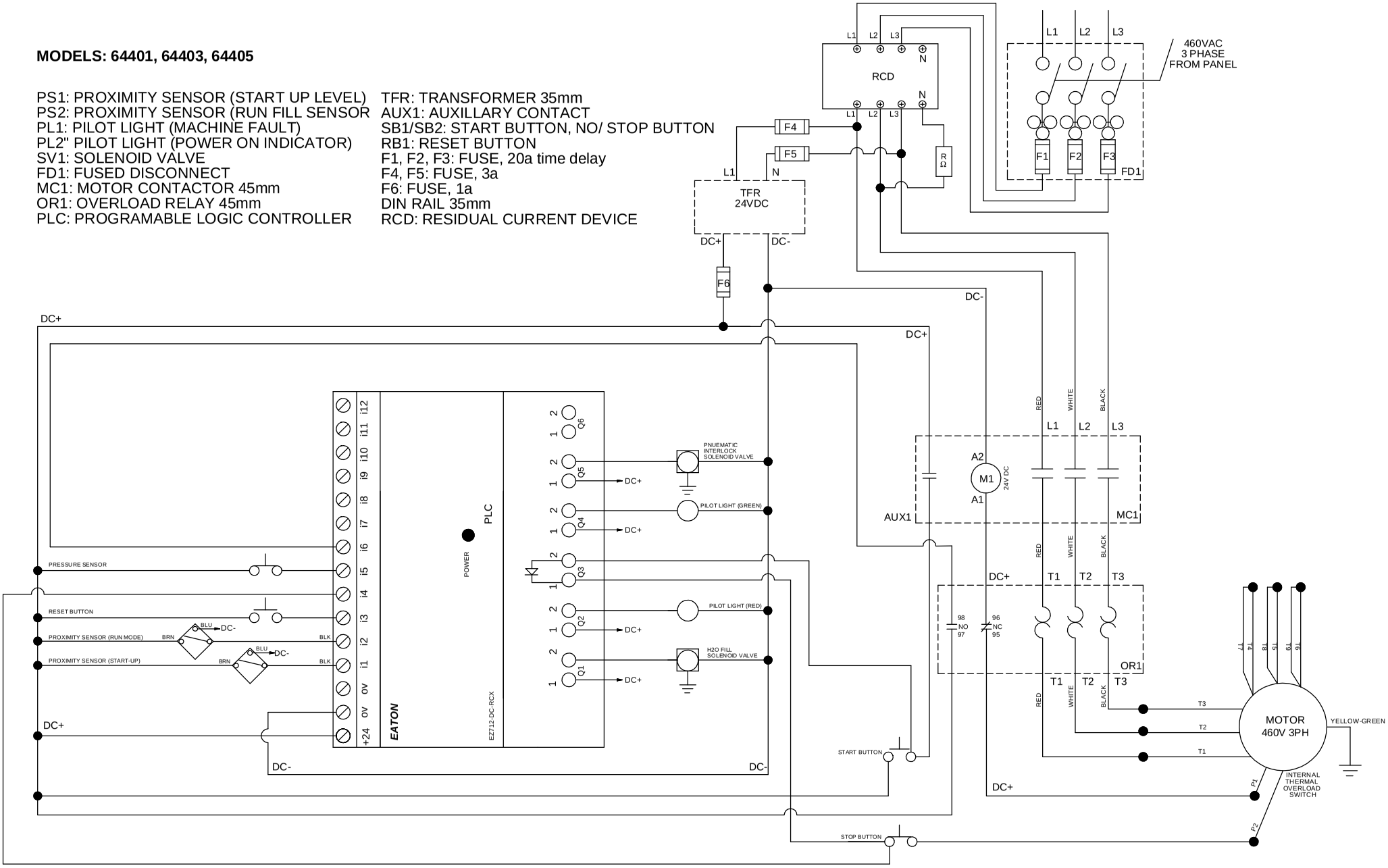

F 200

System pro M compact®

2CSF 423 001 D6404

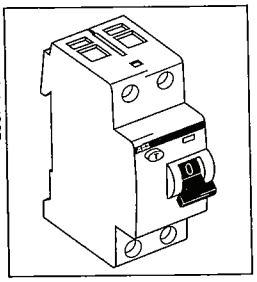

(I) Istruzioni per il montaggio e l'uso

(GB) Operation and assembly instructions

(D) Montage - und Betriebsanleitungen

(F) Instructions pour le montage et l'emploi

(E) Instrucciones de montaje y uso

(P) Instruções de montagem e utilização

(S) Monterings-och användningsinstruktioner

(RU) Инструкция по эксплуатации и установке

(NL) (B) Montage - en gebruiksaanwijzingen

(DK) Anvisninger vedrørende montering og brug

(GR) Οδηγίες εγκατάστασης και λειτουργίας

(SF) Asennus- ja käyttöohjeet

(N) Monterings- og bruksanvisning

http://www.abb.com

(GB)

Technical data

See equipment plate data and refer below:

F200 AC - F200 AC AP-R	Alternate currents
F200 A - F200 A AP-R	Alternate currents, pulse currents with DC components
F200 S	Selective S

Insensitivity to transient current F200 AC, F200 A up to 250A
pulses with wave-form 8/20 µs: F200 AP-R up to 3000 A ; F200 S up to 5000 A

Co-ordination with Short Circuit Protection Device: 10 kA, with 100 A fuse type gL 500V or S700-E/K 100A

Protection against overcurrent:
The RCCBs must be used with Short Circuit Protection devices to provide circuit protection against overloads and short circuit faults.

Power supply
The devices can be fed from either the upper or lower terminals.

Assembly
Designed for fitting on symmetrical DIN rail to standard EN 60715, 35 mm. width, with fast clip included in the breaker.
It is possible to realize the wiring with System pro M compact connection busbars on both the upper and lower terminals (see figure 1).

Figure 2: *Assemby on DIN rail (2.1). Removal (2.2).*

Figure 3: *To remove an F200 RCCB, wired on the lower side with a connection busbar, it is necessary to unscrew the lower terminals (3.1), to push it upwards up to the contact with the DIN rail (3.2) and then to push it downwards up to first position of the fast clip (3.3); the F200 can be removed by lifting it upwards (3.4).*

Figure 4: *To connect the F200 RCCB to a group of S200 MCB's fitted on the lower terminal with busbar, move out the fast clip to first position (4.1), place the device such that the busbar prongs enter the back lower terminals (4.2), move the device towards the DIN rail (4.3) and push downwards (4.4), in this way the fast clip attaches to the DIN rail (4.5).*

Electrical connections
In a three-phase network with neutral (Un =230/400V a.c.-240/415V a.c.-127/230V a.c.), all line wires, included the neutral one, should be connected. (excluded the protection wire). The wires should be firmly connected in the terminals:maximum torque moment according to EN 61008/IEC 61008 standards.
It is also possible to use a four-pole RCCB in single-phase, two-phases and three-phases networks without neutral; see figure 5 for the version with neutral on the right side and figure 6 for the version with neutral on the left side.

Instructions for the user (to be kept available for future users as well).
- Remember to press the "T" test button regularly and at least every six months. The RCCB should trip. If this does not happen, an authorized electrician should be alerted immediately because the system safety has been reduced.
- Always call a qualified technician to carry out any work on fixed or mobile eletrical installation.

Safeguard of the sorroundings
- The product is conforming to the european standards 2002/95/CE regarding the restrictions on the use of certain dangerous substances in the electrical and electronical equipments.
- It is necessary to respect the local regulations concerning the elimination of the packaging materials and of the circuit-breaker and, if possible, to recycle them.

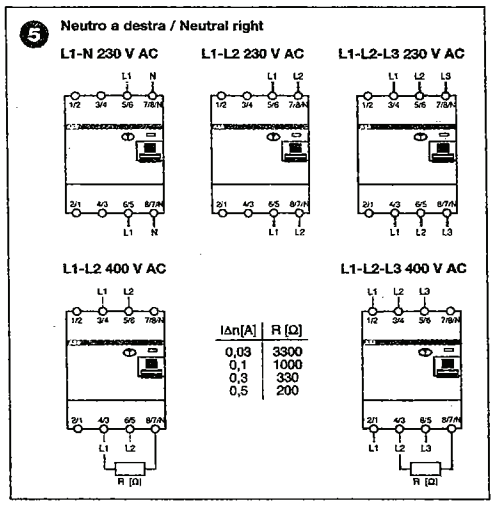

Ferraz Shawmut

SOCOMEC Disconnect Switches

⚠ DANGER / DANGER / PELIGRO

HAZARDOUS VOLTAGE

- This equipment must be installed and serviced only by qualified electrical personnel.
- Turn off all power supplying this equipment before working on or inside equipment.
- Always use a properly rated voltage sensing device to confirm power is off.
- Replace all devices, doors, and covers before turning on power to this equipment.

Failure to follow these instructions will result in death or serious injury.

TENSION DANGEREUSE

- L'installation et l'entretien de cet appareil ne doivent être effectués que par du personnel qualifié.
- Coupez l'alimentation de cet appareil avant d'y travailler.
- Utilisez toujours un dispositif de détection de tension à valeur nominale approprié pour confirmer que toute alimentation est coupée.
- Replacez tous les dispositifs, les portes et les couvercles avant de mettre cet appareil sous tension.

Si ces précautions ne sont pas respectées, cela entraînera la mort ou des blessures graves

TENSION PELIGROSA

- Solamente el personal de mantenimiento eléctrico especializado debera instalar y prestar servicios de mantenimiento a este equipo.
- Desenergice el equipo antes de realizar cualquier trabajo en él.
- Siempre utilice un dispositivo detector de tensión adecuado para confirmar la desenergización del equipo.
- Vuelva a colocar todos los dispositivos, las puertas y las cubiertas antes de energizar este equipo.

El incumplimiento de estas precauciones podrá causar la muerte o lesiones serias.

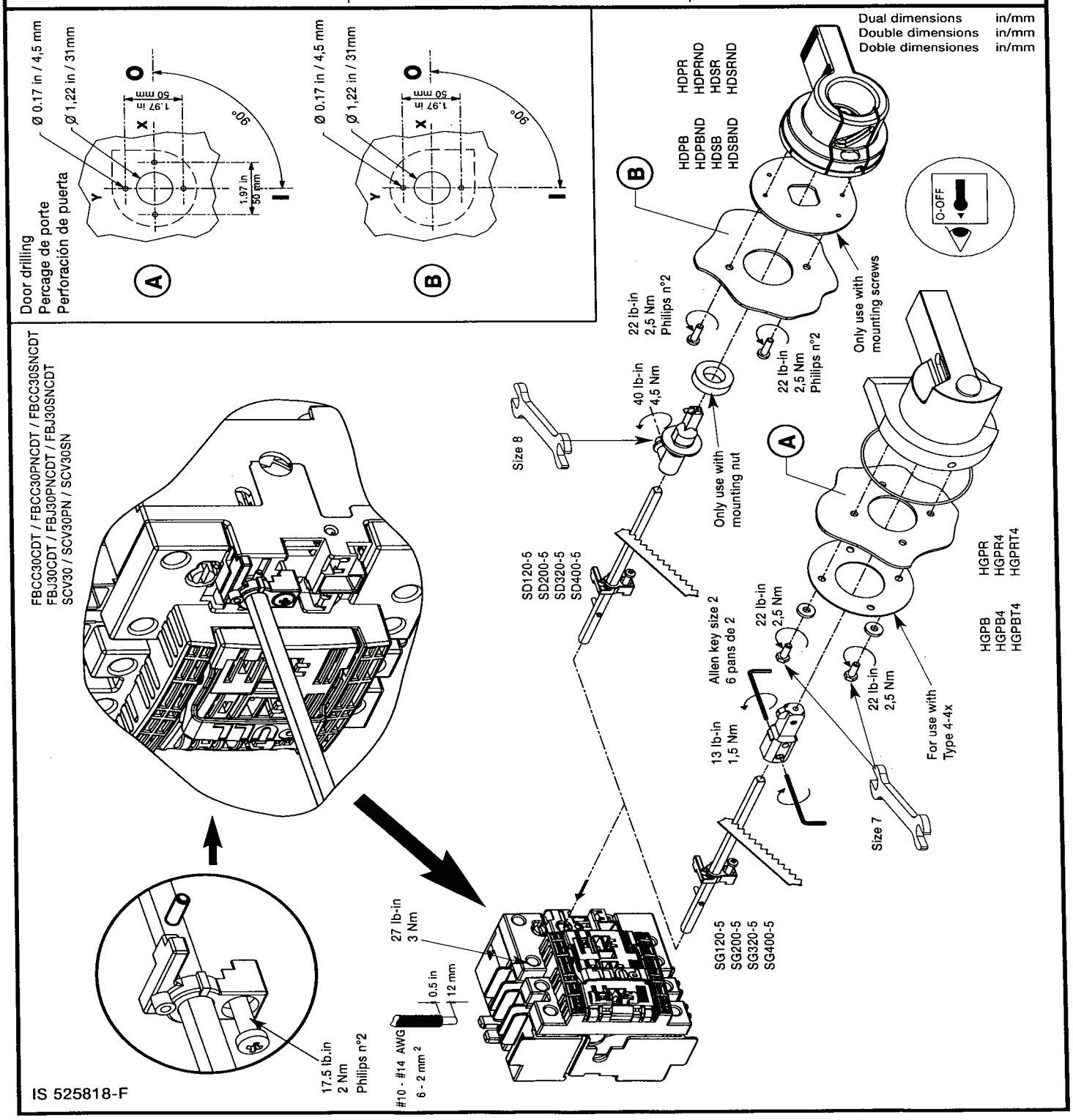

IS 525818-F

RECTO-VERSO / S blanc offset 100g/m² / I Noire pantone black C -Rouge pantone 485U / F 210x297 / P 105x74,25

Shaft length
Longueur d'axe
Longitud del eje

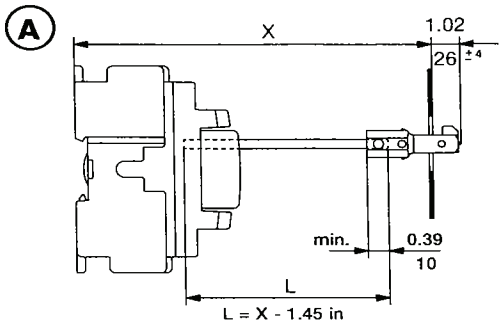

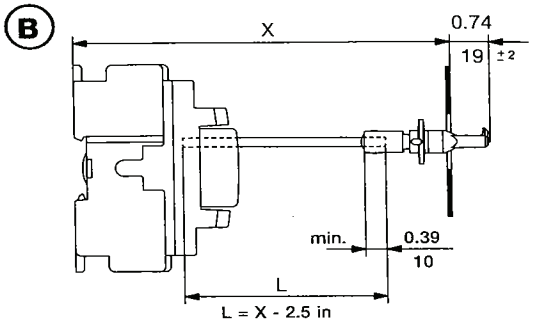

FBCC30CDT / FBCC30PNCDT / FBCC30SNCDT
FBJ30CDT / FBJ30PNCDT / FBJ30SNCDT (Max : 2 Auxiliary contacts / 2 CA / 2 contactos)
SCV30 / SCV30PN / SCV30SN

Max : 4 Auxiliary contacts
Max : 4 CA
Max : 4 contactos
auxiliares

1 NO (F) : AC3
1 NC (O) : AC4

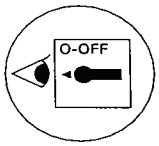

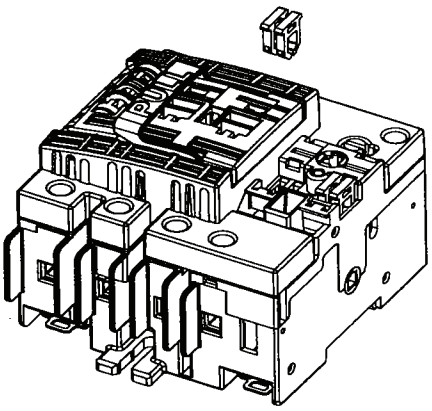

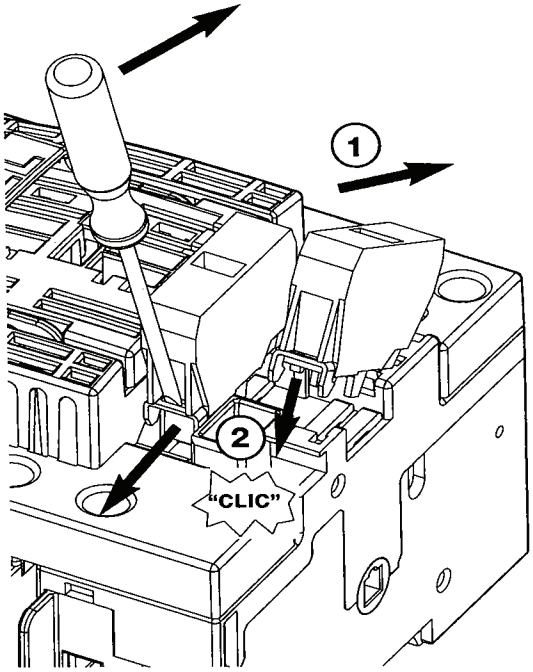

Max : 4 Auxiliary contacts
Max : 4 CA
Max : 4 contactos
auxiliares

1 NO (F) : AC3
1 NC (O) : AC4

Peg
Poussoir
Leva

No peg
Pas de poussoir
No leva

TEST

ON

ON + TEST

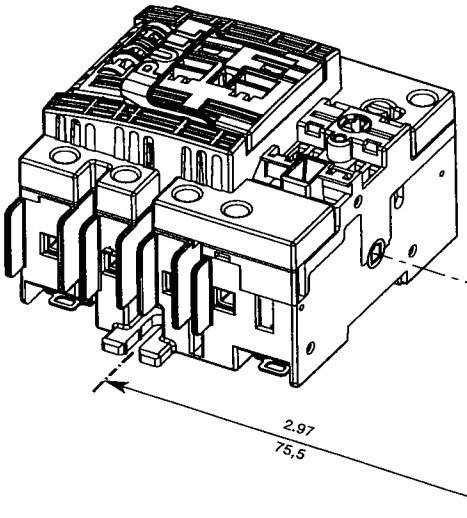

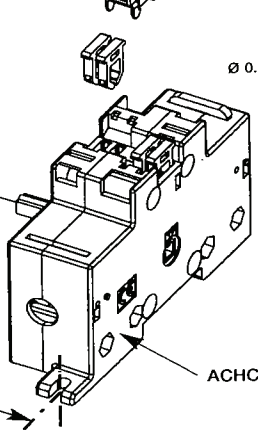

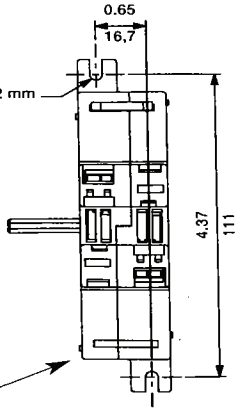

ACHCD

RECTO-VERSO / S blanc offset 100g/m² / I Noire pantonne black C - Rouge pantone 485U / F 210x297 / P 105x74,25

Ferraz Shawmut

SOCOMEC Disconnect Switches

⚠ DANGER / DANGER / PELIGRO

HAZARDOUS VOLTAGE

- This equipment must be installed and serviced only by qualified electrical personnel.
- Turn off all power supplying this equipment before working on or inside equipment.
- Always use a properly rated voltage sensing device to confirm power is off.
- Replace all devices, doors, and covers before turning on power to this equipment.

Failure to follow these instructions will result in death or serious injury.

TENSION DANGEREUSE

- L'installation et l'entretien de cet appareil ne doivent etre effectués que par du personnel qualifié.
- Coupez l'alimentation de cet appareil avant d'y travailler.
- Utilisez toujours un dispositif de détection de tension à valeur nominale approprié pour confirmer que toute alimentation est coupée.
- Replacez tous les dispositifs, les portes et les couvercles avant de mettre cet appareil sous tension.

Si ces précautions ne sont pas respectées, cela entraînera la mort ou des blessures graves

TENSION PELIGROSA

- Solamente el personal de mantenimiento eléctrico especializado debera instalar y prestar servicios de mantenimiento a este equipo.
- Desenergice el equipo antes de realizar cualquier trabajo en él.
- Siempre utilice un dispositivo detector de tensión adecuado para confirmar la desenergización del equipo.
- Vuelva a colocar todos los dispositivos, las puertas y las cubiertas antes de energizar este equipo.

El incumplimiento de estas precauciones podrá causar la muerte o lesiones serias.

Dual dimensions in/mm
Double dimensions in/mm
Doble dimensiones in/mm

❶ FBCC30CDT / FBCC30PNCDT / FBCC30SNCDT

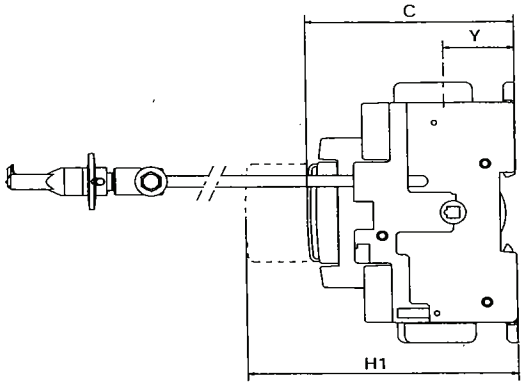

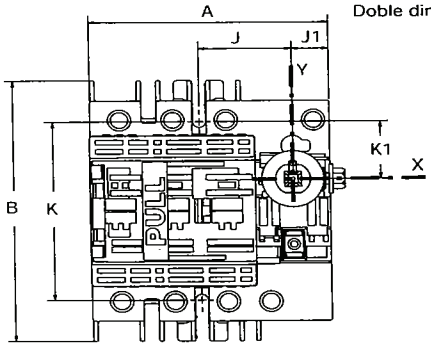

❷ FBJ30CDT / FBJ30PNCDT / FBJ30SNCDT

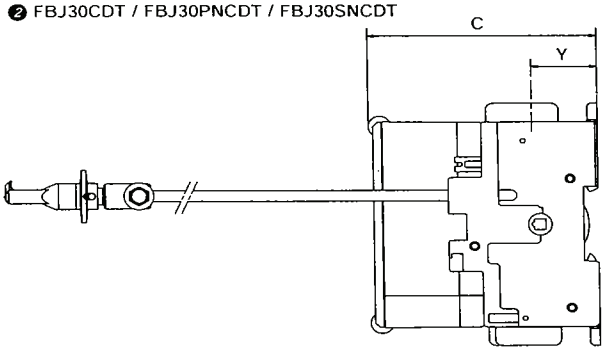

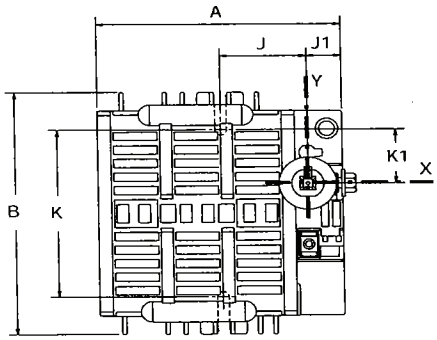

❸ SCV30 / SCV30PN / SCV30SN

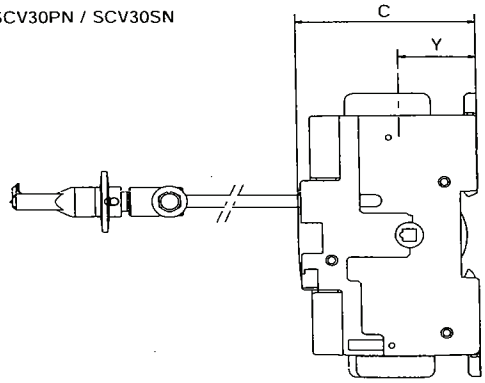

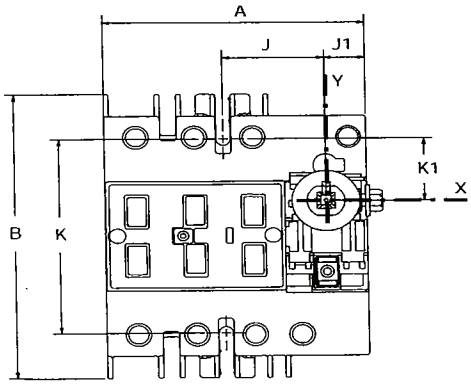

	A		B		C		H		H1		H2		H3		J		J1		K		K1		Y	
	in	mm	in	mm	in	mm	in	mm	in	mm	in	mm	in	mm	in	mm	in	mm	in	mm	in	mm	in	mm
❶ 3 P / 4 P	3.78	96	4.56	116	3.28	83,5	/	/	5.19	132	/	/	/	/	1.47	37,5	0.59	15	3.13	79,5	1	25,5	1.12	28,5
❷ 3 P / 4 P	4.13	105	4.56	116	3.89	99	/	/	/	/	/	/	/	/	1.47	37,5	0.59	15	3.30	84	1	25.5	1.12	28,5
❸ 3 P / 4 P	3.78	96	4.56	116	2.59	66	/	/	/	/	/	/	/	/	1.47	37,5	0.59	15	3.13	79,5	1	25,5	1.12	28,5

IS 525817-E

❶ FBCC30CDT / FBCC30PNCDT / FBCC30SNCDT
❷ FBJ30CDT / FBJ30PNCDT / FBJ30SNCDT
❸ SCV30 / SCV30PN / SCV30SN

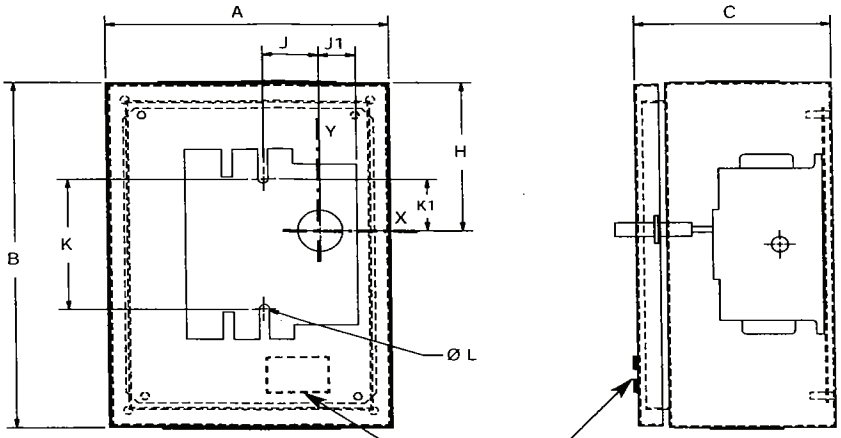

Minimum enclosure dimensions
Dimensions minimums des coffrets
Dimensiones minimas de las cajas

Label 532364 for
Etiquette 532364 pour
Etiqueta 532364 para
} ❸ SCV30 SCV30PN SCV30SN

	A		B		C		H		J		J1		K		K1		ØL	
	in	mm	in	mm	in	mm	in	mm	in	mm	in	mm	in	mm	in	mm	in	mm
❶ 3P/4P	6	153	8	204	6	153	3.5	89	1.47	37,5	0.59	15	3.13	79,5	1	25,5	0.21	5,5
❷ 3P/4P	6	153	8	204	6	153	3.5	89	1.47	37,5	0.59	15	3.30	84	1	25,5	0.21	5,5
❸ 3P/4P	6	153	8	204	6	153	3.5	89	1.47	37,5	0.59	15	3.13	79,5	1	25,5	0.21	5,5

Padlocking the handle
Cadenassage de la poignée
Bloqueable por candados

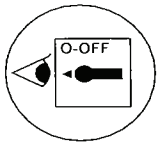

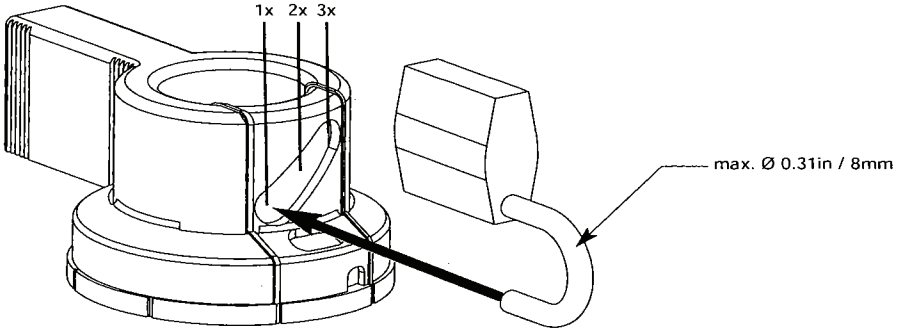

Defeating the interlock in ON position
Déverrouillage de porte en position I
Desenganche del cerrojo en posicion I

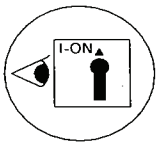

⚠ DANGER / DANGER / PELIGRO

HAZARDOUS VOLTAGE

- Disconnect all power before servicing.
- Be sure enclosure is closed securely before operating device.
- Testing of live equipment should only be performed by qualified service personnel in accordance with local regulations.

Failure to follow these instructions will result in death or serious injury.

TENSION DANGEREUSE

- Couper l'alimentation avant intervention.
- S'assurer de la fermeture du coffret avant manoeuvre de l'appareil.
- Les essais des équipements sous tensions ne doivent être effectués que par du personnel qualifié.

si ces précautions ne sont pas respectées cela entraînera la mort ou des blessures graves.

TENSION PELIGROSA

- Desenergice el equipo antes de una itervención.
- Asegurarse del cierre de la caja antes de manipular el equipo.
- Solamente el personal especializado debera probar los equipos sobre tension.

El incumplimiento de estas precauciones podrá causar la muerte o lesiones serias.

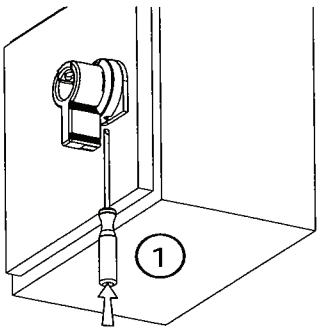

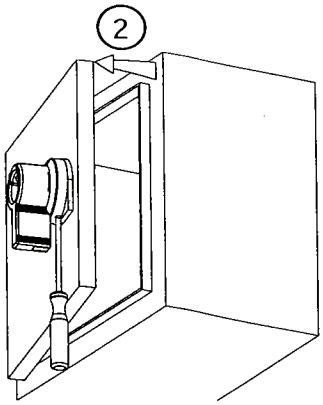

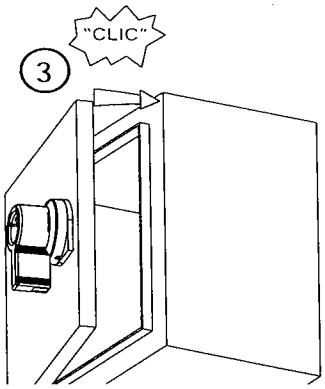

This manual should be given to the person who actually uses the products and is responsible for their maintenance.

INSTRUCTION MANUAL INA-F0154e-JE

Magnetic Contactor

Type
SC-E02 [*1], SC-E02 [*1] /G
SC-E03 [*1], SC-E03 [*1] /G
SC-E04 [*1], SC-E04 [*1] /G
SC-E05 [*1], SC-E05 [*1] /G

Suffixes listed below may be attached to the above types at portions marked with [*].
For details regarding specifications, see the catalog.
[*1] : RM

Safety Precautions

To ensure proper use of the product, be sure to read this manual and the other attached documents carefully before starting installation, operation, maintenance and inspection. Within this instruction manual, safety precautions are ranked, in order of importance, as either "Warning" or "Caution".

⚠WARNING An operator may be killed or seriously injured by a hazardous condition resulting from improper operation.

⚠CAUTION An operator may be suffer minor injuries and/or objects may be damaged by a hazardous condition resulting from improper operation.

Under certain conditions, improper operation may result in serious injury and/or damage even if it is labelled only as "Caution". Every item indicated by either "Warning" or "Caution" should be considered significant. Be sure to give particular care to those items.

⚠WARNING

- Do not touch the product or approach it when power connected. Electric shock or burns may result.
- Turn off the power before starting maintenance or inspection. Failure to turn off power may result in Electric shock or burns.

⚠CAUTION

- For wiring, select wire sizes suitable for the applied voltage and current. Tighten wires with the tightening torque specified in the instruction manual. Failure to do so may result in fire.
- Do not touch the product immediately after the power is turned off. As it may still be hot, burns may result.
- Do not use the product after removing its arc chamber. Electric shock or burns may result.
- Treat the product as industrial waste when discarding.

1. Unpacking

(1) Check that the type, coil voltage, and applicable capacity match the requested specifications.
(2) Make sure that no parts have been lost or damaged.

2. Storage

Store the unit in the packing box. Do not store the packing box in a location subject to high temperature, high humidity, corrosive gas, or direct sun light.

3. Mounting

(1) Mount in a dry, clean and stable location.
(2) Mounting on a vertical surface. The product must not incline more than 30°. (Fig.1)
(3) The rail mounting type can be attached on a standard 35mm IEC60715 mounting rail. Fuji type TH35-15AL mounting rail is recommended. Mounting of the rail on the panel (Fig.2) Attachment and removal (Fig.3)
(4) Even if the product is provided with four mounting holes, use any two mounting holes on a diagonal line. (Fig.4)

4. Mounting space

(1) Mount the products at a distance of at least that shown in the table below. (Fig.5, Fig.6)

A [mm]	0
B [mm]	10
C [mm]	0

(2) When units must be installed very closely, the temperature may rise in some conditions (i.e. the power is continuously supplied for a long time or units that frequently do switching are installed very closely), and it may shorten the life of the coil. Thus, when installing units very closely, it is recommended to install the units 5 mm or more apart.

5. Connection

Connectable wire size and proper tightening torque.

(1) Main terminals

Types			SC-E02 SC-E02/G	SC-E03 SC-E03/G	SC-E04 SC-E04/G	SC-E05 SC-E05/G
Solid and stranded [Note 1] [Note 2]	×1	[mm²]	0.75 to 6			
	×2	[mm²]	"1 to 4" or "1.5 to 6"			
AWG conductor connection	×1		18 to 10			
	×2		"18 to 12" or "16 to 10"			
Stripped length		[mm]	11			
Terminal screw size			M4			
Kinds of screw [Note 3]			⊕ ⊖			
Tightening torque	[N・m]	[lb.in]	1.2 to 1.5 (11 to 13)			

(2) Coil terminals

Types			SC-E02 SC-E02/G	SC-E03 SC-E03/G	SC-E04 SC-E04/G	SC-E05 SC-E05/G
Solid and stranded [Note 1] [Note 2]	×1	[mm²]	0.75 to 6 (φ1 to φ1.6)			
	×2	[mm²]	"0.75 to 1.5" or "1.5 to 2.5"			
AWG conductor connection	×1		18 to 14			
	×2		18 to 14			
Stripped length		[mm]	10			
Terminal screw size			M3.5			
Kinds of screw [Note 3]			⊕ ⊖			
Tightening torque	[N・m]	[lb.in]	0.8 to 1 (7 to 9)			

[Note 1] Finely stranded wire without end sleeve is not applicable.
Use finely stranded wire with end sleeve.
[Note 2] Stranded wire : Number of solids ≦ 7
Except above stranded wire : Finely stranded with sleeve.
[Note 3] ⊕ : Philips PH2 φ6
⊖ : Slotted-head screw I1×5.5 type B
[Note 4] Tighten all terminal screws even if not used.
[Note 5] After alignment or bending back of connected leads, check the tightening torque of the clamping screws.

6. Operation indicator of contactor

Indicator shows contactor operates or not. (Fig.7)
Don't touch or push the indicator for continuity test, or it may result in Electric shock or burns.

7. Maintenance and Inspection

(1) Check that the operating circuit voltage is within the allowable voltage fluctuation range of the coil voltage.
(2) Check that all terminals are tightened with the proper torque periodically.
(3) In AC operation, check that operation power supply is sinusoidal waveform (50Hz and 60Hz) without distortion or cave-in etc.
(4) In combination of short circuit protection equipment (SCPD) type"2"of 8 clause, when slightly contacts weld occur, remove arc chamber and separate slightly welded contacts with a screwdriver, and products can be used in succession.
(5) After fastening terminal screw of middle phase, insert flat-bladed screwdriver between arc chamber and washer of terminal screw and lift the arc chamber, so arc chamber will be removed.
(6) Dark and rough contacts can still function. Do not refinish or grease them. If the contact facings are so badly eroded that the carrier material is visible, replace the product.

8. Short-circuit protective device (SCPD)

(1) Selection table according to IEC 60947-4-1

Type	Type "1"			Type "2"	
	Prospective Current Iq	Fuji Breakers		Prospective Current Iq	IEC 60269-1 gG and gM Fuses
		Part No.	Max. Rating		Max. Rating
	[kA]		[A]	[kA]	[A]
SC-E02 SC-E02/G	10	SA103C/30	30	50	20
SC-E03 SC-E03/G		SA103C/30	30		25
SC-E04 SC-E04/G		SA103C/30	30		40
SC-E05 SC-E05/G		SA53RC/50	50		50

Type "1" co-ordination requires that, under short-circuit conditions, the contactor or starter shall cause no danger to persons or installation and may not be suitable for further service without repair and replacement of parts.
Type "2" co-ordination requires that, under short-circuit conditions, the contactor or starter shall cause no danger to persons or installation and shall be suitable for further use. The risk of contact welding is recognized, in which case the manufacturer shall indicate the measures to be taken as regards the maintenance of the equipment.

(2) Short circuit protection according to UL508
Suitable for use on a circuit capable of delivering not more than 5,000 rms symmetrical amperes, 600V max. Maximum circuit breaker and fuse rating are described in the name plate.

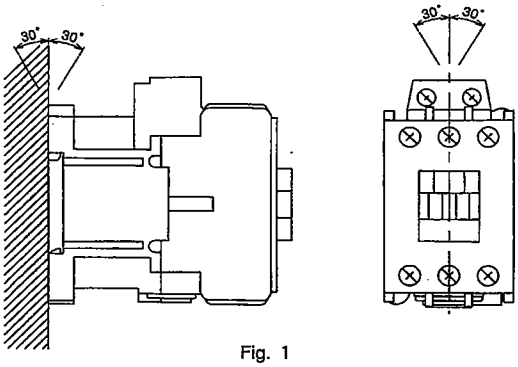

Fig. 1

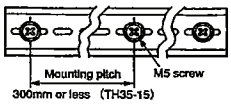

Fig. 2

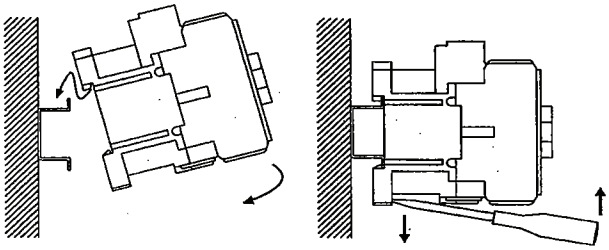

Fig. 3

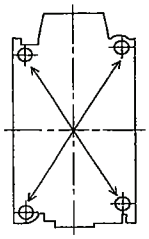

Fig. 4

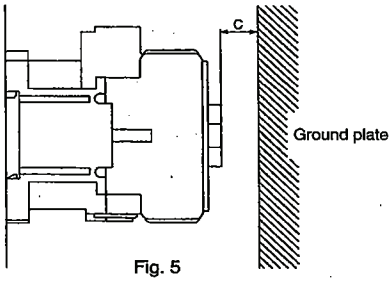

Fig. 5

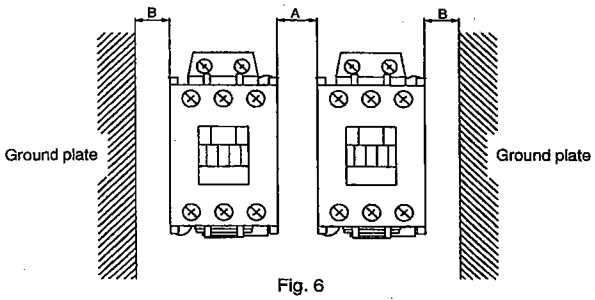

Fig. 6

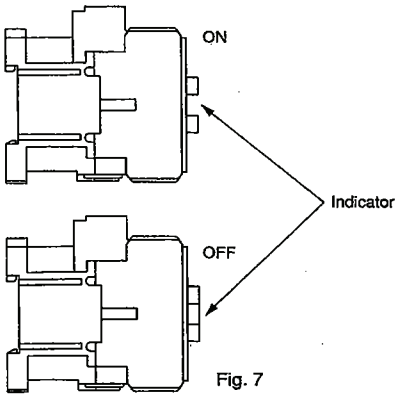

Fig. 7

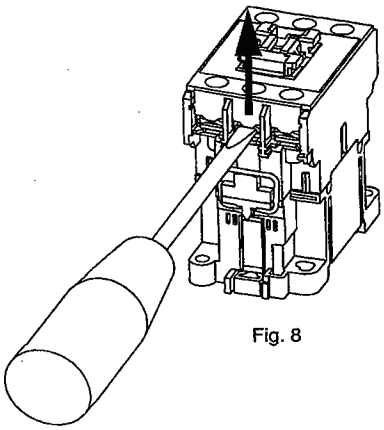

Fig. 8

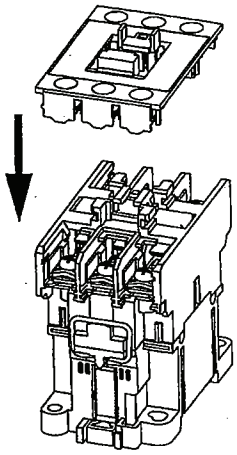

Fig. 9

Wiring diagram for USA and Canada

(1) 3-wire control circuit

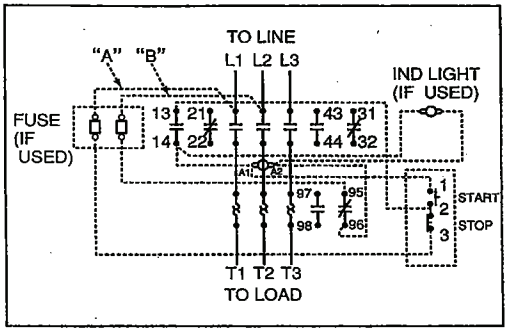

(2) 2-wire control circuit

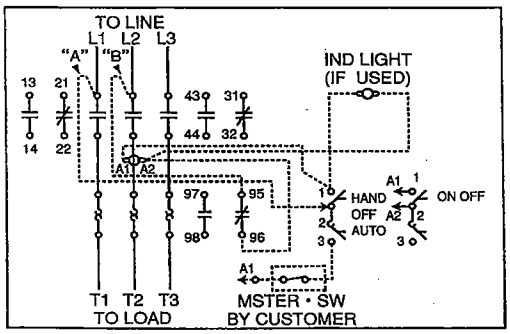

In 2 wire control circuits, be careful of the following points when using thermal overload relay with setting reset button to auto reset mode. If over-current flows, which is not large enough to blow the fuse or to operate the circuit breaker, the magnetic contactor repeats make/break operations. It does this because the thermal overload relay repeats the resets and the trips automatically. This repeated make/break operations would damage the magnetic contactor and the thermal overload relay. Eventually, contact welding short-circuit (phase to phase) or grounding occur, and the fuse blow or circuit breaker operate. In this case, check the magnetic contactor and the thermal overload relay. Replace them if they have been damaged.

Fuji Electric FA Components & Systems Co., Ltd.

Mitsui Sumitomo Bank Ningyo-cho Bldg., 5-7, Nihonbashi
Odemma-cho, Chuo-ku, Tokyo 103-0011, Japan
Phone : +81-3-5847-8060
Fax : +81-3-5847-8182
URL http://www.fujielectric.co.jp/fcs/eng/

F05166843b

INA-F2011c-JE

INSTRUCTION MANUAL

Thermal Overload Relay

Type
TK-E02

This manual should be given to the person who actually uses the products and is responsible for their maintenance.

Safety Precautions

To ensure proper use of the product, be sure to read this manual and the other attached documents carefully before starting installation, operation, maintenance and inspection. Within this instruction manual, safety precautions are ranked, in order of importance, as either "Warning" or "Caution".

⚠ WARNING An operator may be killed or seriously injured by a hazardous condition resulting from improper operation.

⚠ CAUTION An operator may suffer minor injuries and/or objects may be damaged by a hazardous condition resulting from improper operation.

Under certain conditions, improper operation may result in serious injury and/or damage even if it is labeled only as "Caution". Every item indicated by either "Warning" or "Caution" should be considered significant. Be sure to give particular care to those items.

⚠ WARNING

- Do not touch the product or approach it when power connected. Electric shock or burns may result.
- Turn off the power before starting maintenance or inspection. Failure to do so may result in electric shock.

⚠ CAUTION

- Install the product in space more than being provided by this manual. Failure to do so may result in fire or burns.
- For wiring, select wire size suitable for the applied voltage and current. Burns may result. Tighten wires with the tightening torque specified in the instruction manual. Failure to do so may result in fire.
- Do not touch the product immediately after the power is turned off. As it may still be hot, burns may result.
- Treat the product as industrial waste when discarding.

1. Unpacking

(1) Check that the type and rating match the requested specifications.
(2) Make sure that no parts have been lost or damaged.

2. Storage

Store the unit in the packing box. Do not store the packing box in a location subject to high temperature, high humidity, corrosive gas, or direct sunlight.

3. Mounting

(1) Mount in a dry, clean and stable location.
(2) Mounting on a vertical surface. The product must not incline more than 30° . (Fig.1)
(3) Combination of contactors and thermal overload relay(TOR) and type of separate mounting unit for TOR.

Thermal overload relay (TOR)	Type of contactor on which TOR can be mounted	Type of separate mounting unit on which TOR can be mounted
TK-E02	SC-E02, E03, E04, E05 SC-E02/G, E03/G, E04/G, E05/G	SZ-HCE

4. Mounting space

(1) Mount the products at a distance of at least that shown in the table below. (Fig.2 ex. TK-E02+SZ-HCE)

Dimension A	20mm
Dimension B	10mm

5. Connection

Connectable wire size and proper tightening torque

(1) Main terminals

Type			TK-E02
Direct Connection	Solid Stranded Flexible stranded with end sleeve 【Note 1】【Note 2】	[mm²]	1×(0.75 to 4) 2×(1 to 4)
		AWG	1×(18 to 12) 2×(18 to 12)
	Stripped length	[mm]	11
Terminal screw size			M4
Tool 【Note 3】			⊕ ⊖
Tightening torque		[N·m]	1.2 to 1.5
		[lb·in]	11 to 13

(2) Auxiliary terminals

Type			TK-E02
Direct Connection	Solid Stranded Flexible stranded with end sleeve 【Note 1】【Note 2】	[mm²]	1×(0.75 to 2.5) 1×(φ1 to φ1.6) 2×(0.75 to 1.5) 2×(1.5 to 2.5)
		AWG	1×(18 to 14) 2×(18 to 14)
	Stripped length	[mm]	10
	Terminal screw size		M3.5
	Tool 【Note 3】		⊕ ⊖
	Tightening torque	[N·m]	0.8 to 1
		[lb·in]	7 to 9

【Note1】 Finely stranded wire without end sleeve is not applicable. Us finely stranded wire with end sleeve.
【Note2】 Stranded wire: Number of solids ≦ 7
Flexible stranded wire: Number of solids > 7
【Note3】 ⊕ : Philips PH2 φ6
⊖ : Slotted-head screw I-1×5.5×L Type B
【Note4】 Tighten all terminal screws even if not used.
【Note5】 After alignment or bending back of connected wires, check the tightening torque again.

6. Usage

(1) Turn the adjustment dial within the scale so that the full load current of the motor is at the ▼ mark (Fig. 3). Do not use beyond the scale, or the expected performance cannot be obtained.
(2) By pushing the Trip bar toward the arrow, the sequence check will start (Fig.4).
(3) The operation status of the thermal overload relay is indicated with the projected length of the Trip bar (Fig.4).
(4) If the thermal overload relay operates, first remove the cause of failure such as overload, and then lightly press the reset button to reset it. (In this case, the thermal overload relay cannot reset, if it is not cooled sufficiently.) (Fig.3)
(5) To change over from manual reset mode to automatic reset mode, keep the reset button pushed by the procedure shown in Fig.5.
(6) Note that the motor restarts automatically if the Thermal overload relay in a two-wire circuit is reset I at automatic reset mode.

7. Maintenance and Inspection

7.1 Inspection before operation

(1) Check that all screws are tightened.
(2) Check that there is no foreign matter in the unit, such as wire chips or washers.

7.2 Periodic inspection

(1) Perform initial inspection early, and perform subsequent inspections on a regular basis.
(2) Check that all terminals are tightened with the proper torque periodically.
(3) Please request "Maintenance & Inspection manual·Parts list" to our sales office, when necessary.

8. Short circuit protective device (SCPD)

Thermal overload relay		Contactor type	IEC60947-4-1					UL508
			Type 1			Type 2		Maximum circuit breaker and fuse rating are described in the nameplate.
			Prospective Current Iq [kA]	Fuji Breaker		Prospective Current Iq [kA]	IEC60269-1 gG and gM Fuse Rating [A]	
Type	Rrange [A]			Type	Rating [A]			
TK-E02	0.1–0.15	SC-E02 SC-E03 SC-E04 SC-E05	10	–	–	50	–	Suitable for use on capable of delivering not more than 1000 rms symmetrical amperes, 600V max.
	0.13–0.2			–	–		–	
	0.15–0.24			–	–		–	
	0.2–0.3			–	–		–	
	0.24–0.36			–	–		–	
	0.3–0.45			–	–		–	
	0.36–0.54			SA53RC	3		2	
	0.48–0.72			SA53RC	3		4	
	0.64–0.96			SA53RC	5		4	
	0.8–1.2			SA53RC	5		4	
	0.95–1.45			SA53RC	10		16	
	1.4–2.2	SC-E02/G SC-E03/G SC-E04/G SC-E05/G		SA53RC	10		20	Suitable for use on capable of delivering not more than 5000 rms symmetrical amperes, 600V max.
	1.7–2.6			SA53RC	10		20	
	2.2–3.4			SA53RC	10		20	
	2.8–4.2			SA53RC	10		20	
	4–6			SA53RC	10		20	
	5–8			SA103C	30		20	
	6–9			SA103C	30		20	
	7–11			SA103C	30		20	
	9–13			SA103C	30		25	
	12–18			SA103C	30		40	
	16–22			SA53RC	50		50	
	20–25			SA53RC	50		50	

Type 1 is a selection that the contact welding or damage may result after short-circuited. Exchange the product for a new product promptly. Type 2 is a selection that the product can be used after short-circuited. The slight welding of the main contacts may result. Check if the contacts are welded. Separate the contacts by driver or its equivalent in case of welding.

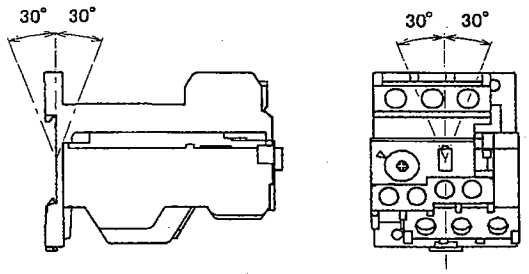

Fig.1

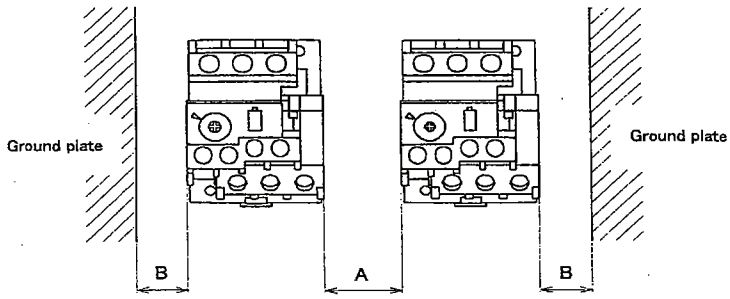

Fig.2

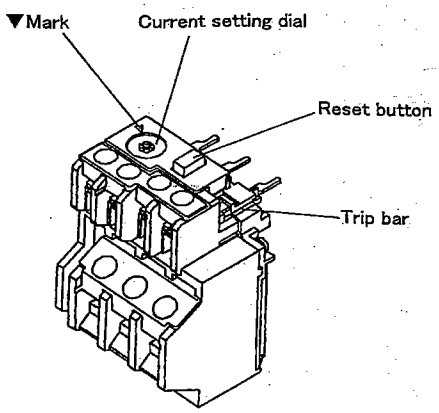

Fig.3

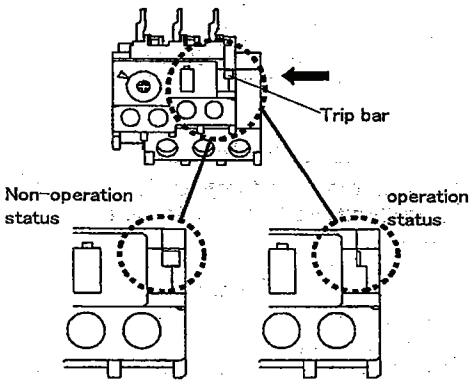

Fig.4

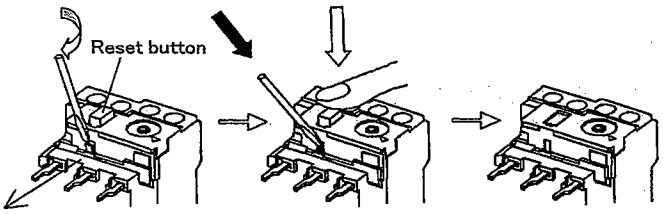

Break plastic cover to expose window.

With pointed tool, push the Reset button back until it latches.

Reset button is now in automatic reset mode.

Note: Use caution when selecting automatic reset mode.
Equipment damage can result when used improperly.

Fig.5

Fuji Electric FA Components & Systems Co., Ltd.
Mitsui Sumitomo Bank Ningyo-cho Bldg., 5-7, Nihonbashi
Odemma-cho, Chuo-ku, Tokyo 103-0011, Japan
Phone:+81-3-5847-8060
Fax :+81-3-5847-8182
URL http://www.fujielectric.co.jp/fcs/

F21265083

60W Single Output Industrial DIN Rail Power Supply — DR-60 series

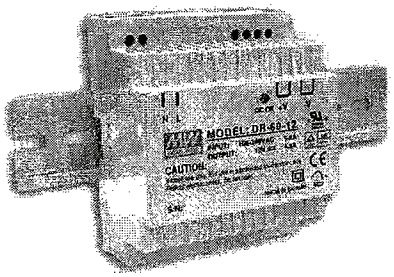

■ Features :

- Universal AC input/Full range
- Protections: Short circuit / Overload / Over voltage
- Cooling by free air convection
- Can be installed on DIN rail TS-35/7.5 or 15
- UL 508(industrial control equipment)approved
- Isolation class II
- LED indicator for power on
- 100% full load burn-in test
- 3 years warranty

SPECIFICATION

MODEL		DR-60-5	DR-60-12	DR-60-15	DR-60-24
OUTPUT	DC VOLTAGE	5V	12V	15V	24V
	RATED CURRENT	6.5A	4.5A	4A	2.5A
	CURRENT RANGE	0 ~ 6.5A	0 ~ 4.5A	0 ~ 4A	0 ~ 2.5A
	RATED POWER	32.5W	54W	60W	60W
	RIPPLE & NOISE (max.) Note.2	80mVp-p	120mVp-p	120mVp-p	150mVp-p
	VOLTAGE ADJ. RANGE	4.75 ~ 5.5V	11.1 ~ 13.2V	13.5 ~ 16.5V	21.6 ~ 26.4V
	VOLTAGE TOLERANCE Note.3	±2.0%	±1.0%	±1.0%	±1.0%
	LINE REGULATION	±1.0%	±1.0%	±1.0%	±1.0%
	LOAD REGULATION	±1.0%	±1.0%	±1.0%	±1.0%
	SETUP, RISE TIME	100ms, 30ms/230VAC 200ms, 30ms/115VAC at full load			
	HOLD UP TIME (Typ.)	100ms/230VAC 23ms/115VAC at full load			
INPUT	VOLTAGE RANGE	88 ~ 264VAC 124 ~ 370VDC			
	FREQUENCY RANGE	47 ~ 63Hz			
	EFFICIENCY (Typ.)	76%	82%	83%	84%
	AC CURRENT (Typ.)	1.2A/115VAC 0.8A/230VAC			
	INRUSH CURRENT (Typ.)	COLD START 18A/115VAC 36A/230VAC			
PROTECTION	OVERLOAD	105 ~ 160% rated output power			
		Protection type : Constant current limiting, recovers automatically after fault condition is removed			
	OVER VOLTAGE	5.75 ~ 6.75V	13.8 ~ 16.2V	17.25 ~ 20.25V	27.6 ~ 32.4V
		Protection type : Shut down o/p voltage, re-power on to recover			
ENVIRONMENT	WORKING TEMP.	-20 ~ +60℃ (Refer to output load derating curve)			
	WORKING HUMIDITY	20 ~ 90% RH non-condensing			
	STORAGE TEMP., HUMIDITY	-40 ~ +85℃, 10 ~ 95% RH			
	TEMP. COEFFICIENT	±0.03%/℃ (0 ~ 50℃)			
	VIBRATION	10 ~ 500Hz, 2G 10min./1cycle, period for 60min. each along X, Y, Z axes; Mounting: Compliance to IEC60068-2-6			
SAFETY & EMC (Note 4)	SAFETY STANDARDS	UL60950-1, TUV EN60950-1 approved, Design refer to EN50178			
	WITHSTAND VOLTAGE	I/P-O/P:3KVAC			
	ISOLATION RESISTANCE	I/P-O/P:100M Ohms/500VDC			
	EMI CONDUCTION & RADIATION	Compliance to EN55011,EN55022 (CISPR22) Class B			
	HARMONIC CURRENT	Compliance to EN61000-3-2,-3			
	EMS IMMUNITY	Compliance to EN61000-4-2, 3, 4, 5, 6, 8, 11, ENV50204, EN55024, EN61000-6-2, EN61204-3, heavy industry level, criteria A			
OTHERS	MTBF	216.2K hrs min. MIL-HDBK-217F (25℃)			
	DIMENSION	78*93*56mm (W*H*D)			
	PACKING	0.3Kg; 48pcs/15.4Kg/1.02CUFT			
NOTE	1. All parameters NOT specially mentioned are measured at 230VAC input, rated load and 25℃ of ambient temperature. 2. Ripple & noise are measured at 20MHz of bandwidth by using a 12" twisted pair-wire terminated with a 0.1uf & 47uf parallel capacitor. 3. Tolerance : includes set up tolerance, line regulation and load regulation. 4. The power supply is considered a component which will be installed into a final equipment. The final equipment must be re-confirmed that it still meets EMC directives.				

■ Mechanical Specification

Case No.918B Unit:mm

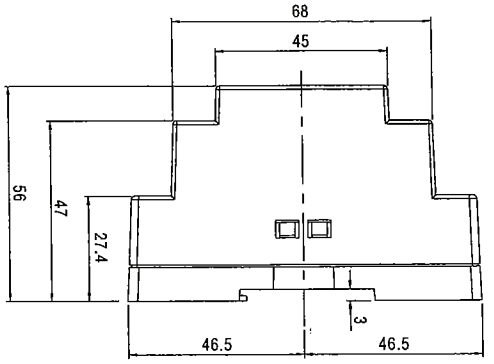

Terminal Pin No. Assignment

Pin No.	Assignment	Pin No.	Assignment
1	AC/N	5,6	-V
2	AC/L	7	LED
3,4	+V	8	+V ADJ.

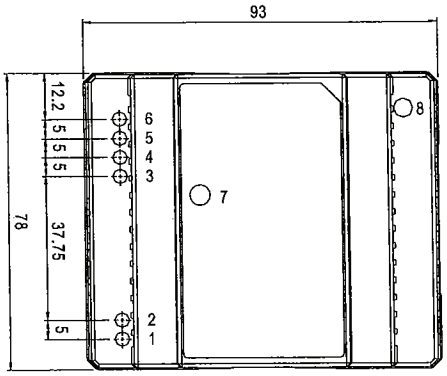

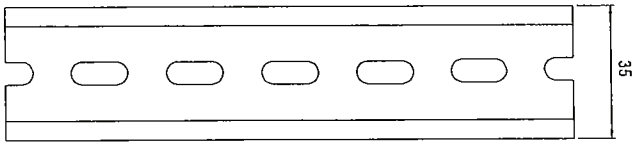

ADMISSIBLE DIN-RAIL:TS35/7.5 OR TS35/15

■ Block Diagram

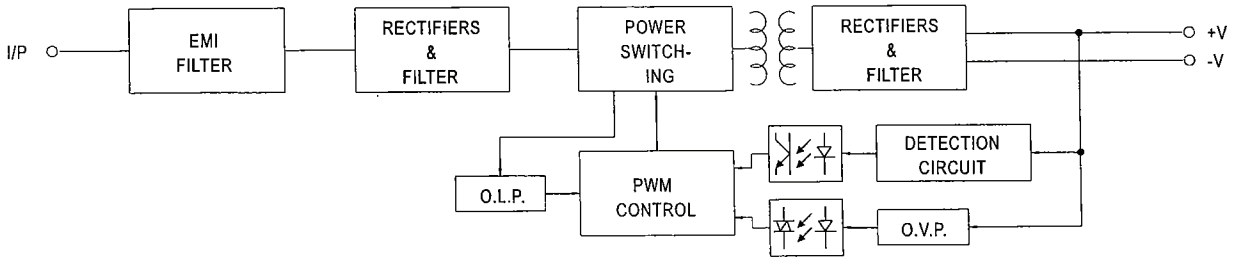

■ Derating Curve

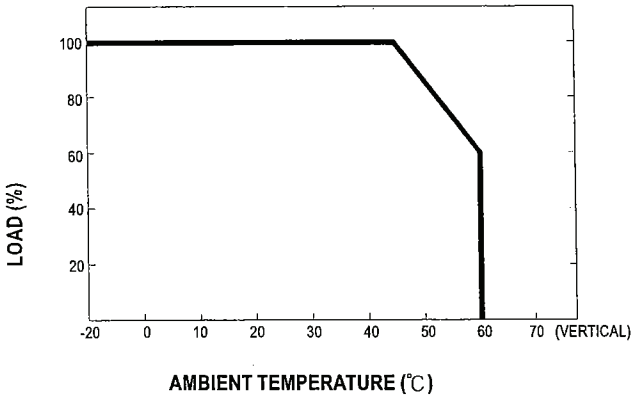

120W Single Output Industrial DIN RAIL Power Supply DRH-120 series

■ Features :

- Protections: Short circuit / Overload / Over voltage / Over temperature
- Cooling by free air convection
- Built-in constant current limiting circuit
- Can be installed on DIN rail TS-35/7.5 or 15
- EN61000-6-2(EN50082-2) industrial immunity level
- 100% full load burn-in test
- Fixed switching frequency at 70KHz
- 3 years warranty

SPECIFICATION

MODEL		DRH-120-24	DRH-120-48
OUTPUT	DC VOLTAGE	24V	48V
	RATED CURRENT	5A	2.5A
	CURRENT RANGE	0 ~ 5A	0 ~2.5A
	RATED POWER	120W	120W
	RIPPLE & NOISE (max.) Note.2	80mVp-p	80mVp-p
	VOLTAGE ADJ. RANGE	24 ~ 28V	48 ~ 55V
	VOLTAGE TOLERANCE Note.3	±1.0%	±1.0%
	LINE REGULATION	±0.5%	±0.5%
	LOAD REGULATION	±0.5%	±0.5%
	SETUP, RISE, HOLD UP TIME	1700ms, 120ms, 16ms/400VAC 1000ms, 120ms, 30ms/500VAC at full load	
INPUT	VOLTAGE RANGE	340 ~ 550VAC 480 ~ 780VDC	
	FREQUENCY RANGE	47 ~ 63Hz	
	EFFICIENCY (Typ.)	85%	86%
	AC CURRENT	0.65A/400VAC 0.6A/500VAC	
	INRUSH CURRENT (max.)	COLD START 50A	
	LEAKAGE CURRENT	<3.5mA / 530VAC	
PROTECTION	OVERLOAD	105 ~ 160% rated output power	
		Protection type : Constant current limiting, recovers automatically after fault condition is removed	
	OVER VOLTAGE	30 ~ 36V	59 ~ 66V
		Protection type : Shut down o/p voltage, re-power on to recover	
	OVER TEMPERATURE	85℃±5℃ (TSW) detect on heatsink of power switch	
		Protection type : Shut down o/p voltage, recovers automatically after temperature goes down	
ENVIRONMENT	WORKING TEMP.	-20 ~ +60℃ (Refer to output load derating curve)	
	WORKING HUMIDITY	20 ~ 90% RH non-condensing	
	STORAGE TEMP., HUMIDITY	-40 ~ +85℃, 10 ~ 95% RH	
	TEMP. COEFFICIENT	±0.03%/℃ (0 ~ 50℃)	
	VIBRATION	Component: 10 ~ 500Hz, 2G 10min./1cycle, 60min. each along X, Y, Z axes; Mounting clip: Compliance to IEC60068-2-6	
SAFETY & EMC (Note 4)	SAFETY STANDARDS	UL60950-1 approved, IEC60950-1 CB approved by SIQ	
	WITHSTAND VOLTAGE	I/P-O/P:3KVAC I/P-FG:1.5KVAC O/P-FG:0.5KVAC	
	ISOLATION RESISTANCE	I/P-O/P, I/P-FG, O/P-FG:100M Ohms/500VDC	
	EMI CONDUCTION & RADIATION	Compliance to EN55011 (CISPR11), EN55022 (CISPR22), EN61204-3 Class B	
	EMS IMMUNITY	Compliance to EN61000-4-2,3,4,5,6,8,11, ENV50204, EN61204-3, EN61000-6-2 (EN50082-2), heavy industry level, criteria A	
OTHERS	MTBF	178.7Khrs min. MIL-HDBK-217F (25℃)	
	DIMENSION	65.5*125.2*100mm (W*H*D)	
	PACKING	0.75Kg; 20pcs/16Kg/1.29CUFT	
NOTE	1. All parameters NOT specially mentioned are measured at 400VAC input, rated load and 25℃ of ambient temperature. 2. Ripple & noise are measured at 20MHz of bandwidth by using a 12" twisted pair-wire terminated with a 0.1uf & 47uf parallel capacitor. 3. Tolerance : includes set up tolerance, line regulation and load regulation. 4. The power supply is considered a component which will be installed into a final equipment. The final equipment must be re-confirmed that it still meets EMC directives.		

Tel: 1-973-779-8282 www.trcelectronics.com

■ Mechanical Specification

Case No.921A Unit:mm

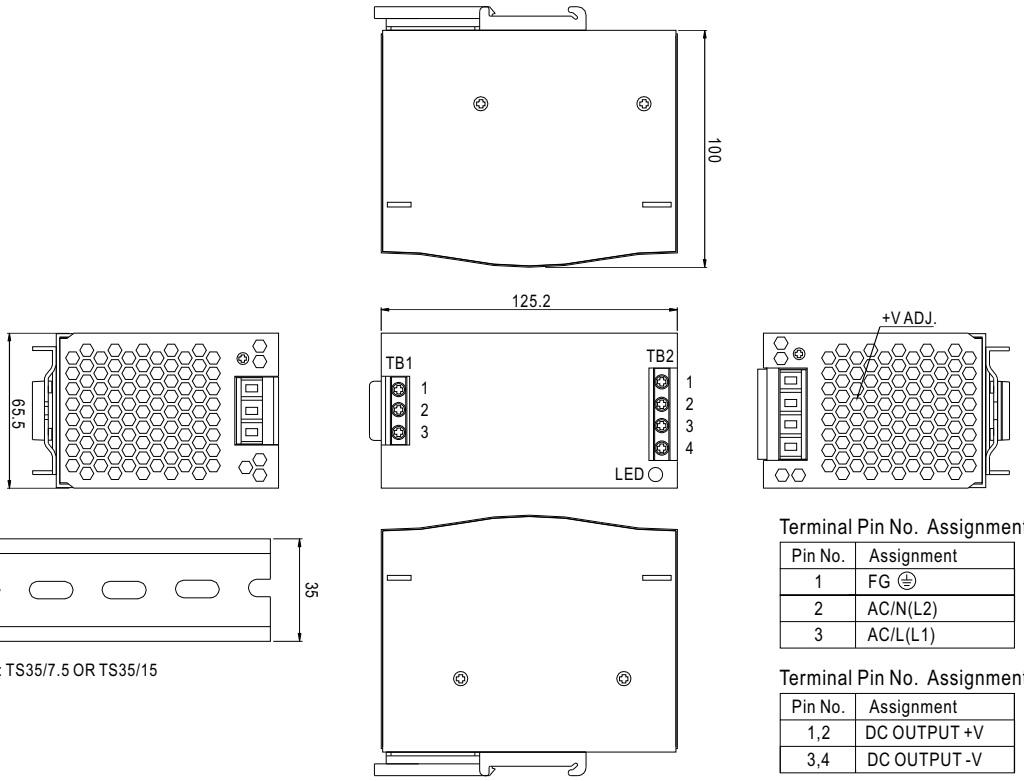

ADMISSIBLE DIN-RAIL: TS35/7.5 OR TS35/15

Terminal Pin No. Assignment (TB1)

Pin No.	Assignment
1	FG ⏚
2	AC/N(L2)
3	AC/L(L1)

Terminal Pin No. Assignment (TB2)

Pin No.	Assignment
1,2	DC OUTPUT +V
3,4	DC OUTPUT -V

■ Block Diagram

fosc : 70KHz

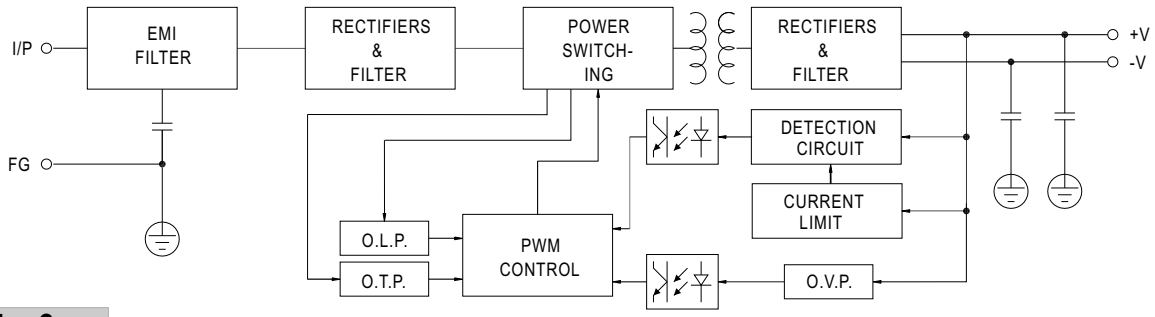

■ Derating Curve

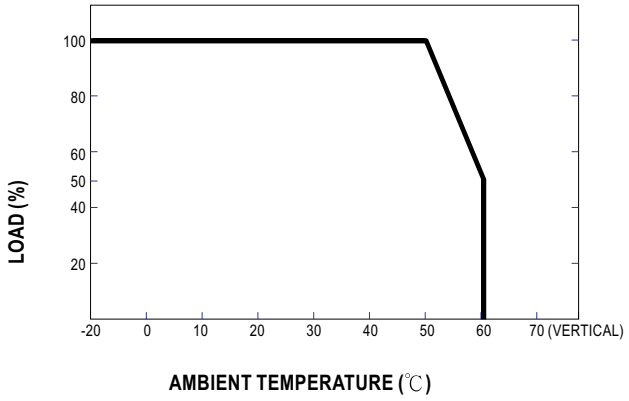

Tel: 1-973-779-8282 www.trcelectronics.com

Installation Instructions
Instrucciones de montaje
Notice d'installation
Montageanweisung
Istruzioni per il montaggio

ALPHA LOVAG

EZ719-DC-RCX

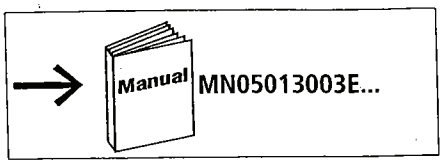

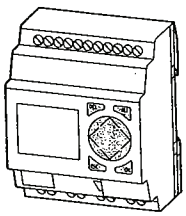

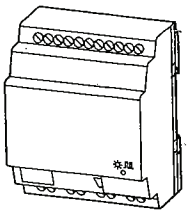

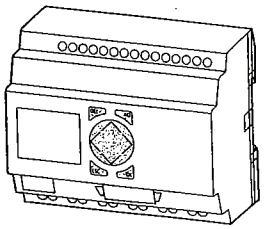

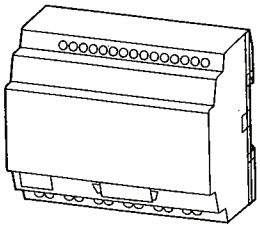

Electric current! Danger to life!
Only skilled or instructed persons may carry out the following operations.
The power supply units are mounting devices.
The national regulations/specifications must be observed for the installation of the devices.

¡Corriente eléctrica! ¡Peligro de muerte!
El trabajo a continuación descrito debe ser realizado por personas cualificadas y advertidas. Las fuentes de alimentación son aparatos de montaje. Para la instalación de los aparatos han de tenerse en cuenta las normativas/especificaciones a nivel local.

Tension électrique dangereuse !
Seules les personnes qualifiées et averties doivent exécuter les travaux ci-après. Les blocs d'alimentation sont des appareils faisant partie intégrante d'une installation. Veuillez respecter les normes de mise en œuvre spécifiques aux différents pays.

Lebensgefahr durch elektrischen Strom!
Nur Elektrofachkräfte und elektrotechnisch unterwiesene Personen dürfen die im Folgenden beschriebenen Arbeiten ausführen.
Die Stromversorgungsgeräte sind Einbaugeräte.
Beachten Sie für die Installation der Geräte die länderspezifischen Vorschriften.

Tensione elettrica: Pericolo di morte!
Solo persone abilitate e qualificate possono eseguire le operazioni di seguito riportate. Gli alimentatori sono unità per montaggio interno. Per l'installazione degli apparecchi è necessario rispettare le normative specifiche di ciascun paese.

Standard connection, outputs – Conexión estándar, salidas – Raccordement standard, sorties – Standardanschluss, Ausgänge – Collegamento standard, uscite

Relay outputs – Salidas con relé – Sorties à relais – Relais-Ausgänge – Uscite a relè

EZ7...-...-RC, EZ6...-...-RE

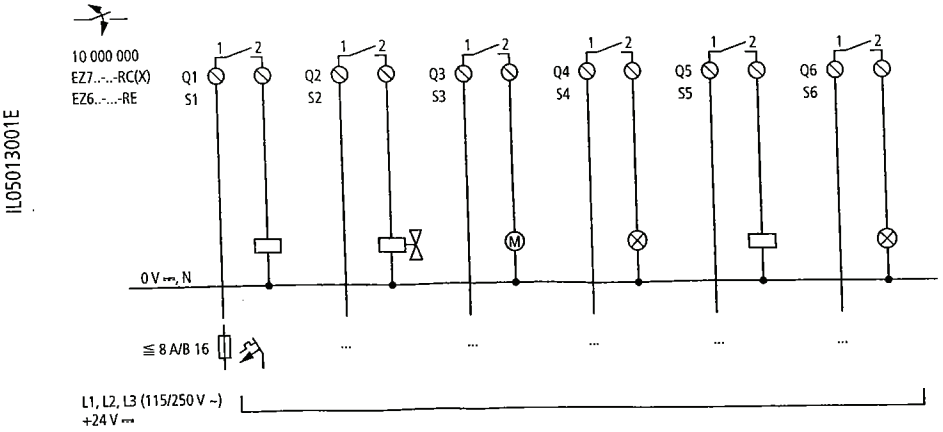

IL05013001E

Standard connection, inputs – Conexión estándar, entradas – Raccordement standard, entrées – Standardanschluss, Eingänge – Collegamento standard, ingressi

IL05013001E

EZ7..-DA-..C..
EZ7..-DC-..C..

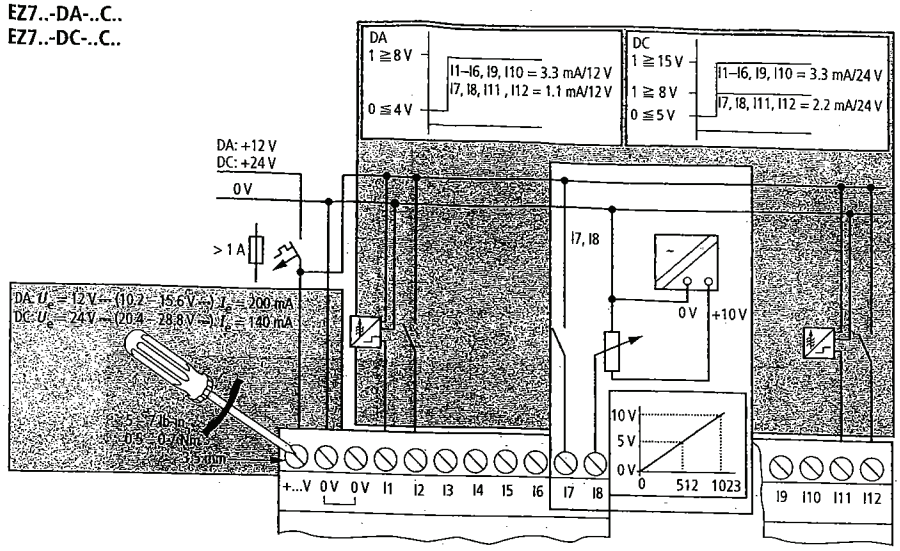

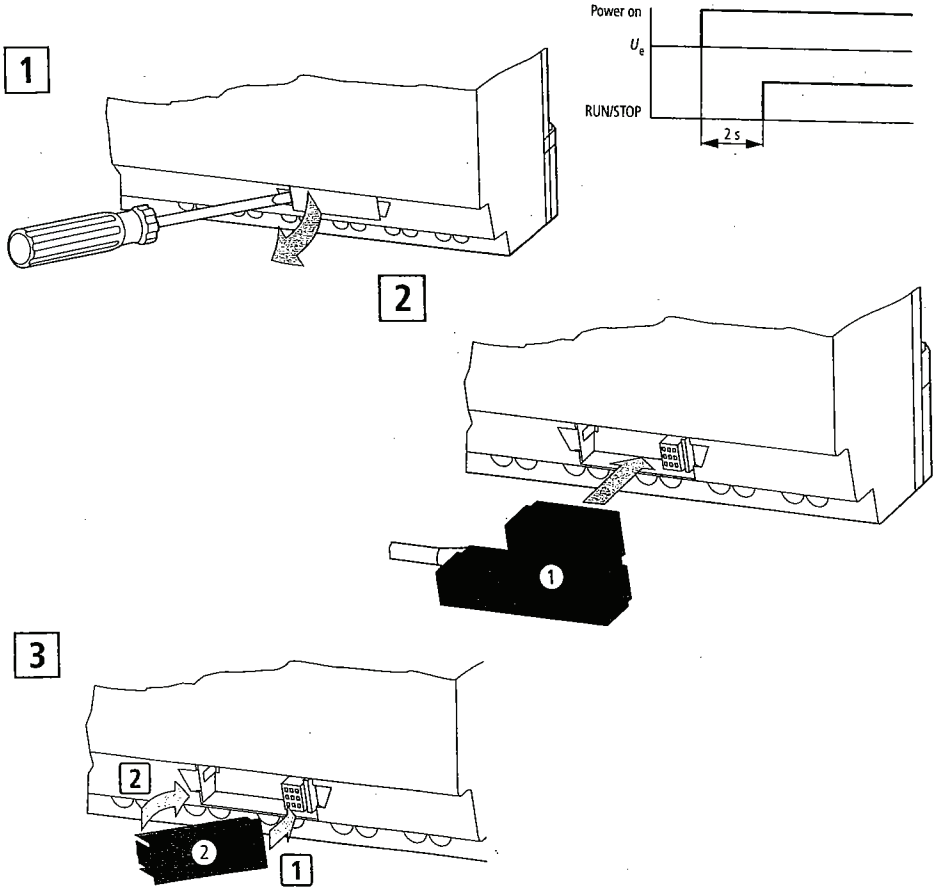

IL05013001E

EZ...-AC-...

When operating with 115/230 V keep interface closed!

¡Mantener interface cerrado con accionamiento a 115/230 V!

En cas de fonctionnement sous 115/230 V, s'assurer que l'emplacement destiné à la cartouche mémoire et au câble PC soit obturé afin d'éviter tout danger !

Schnittstelle bei Betrieb mit 115/230 V geschlossen halten!

Tenere chiusa l'interfaccia per il funzionamento con 115/230 V!

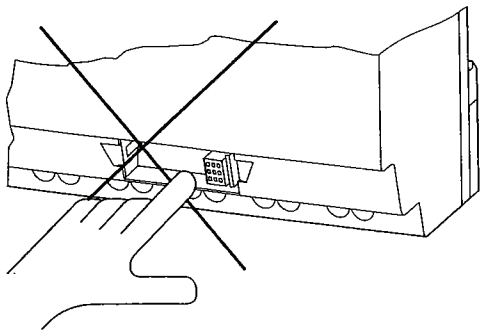

BILL OF MATERIALS

ITEM	P/N	DESCRIPTION	Qty
1	64429	AIR FLOW BAFFLE	2
2	64411	MAIN TANK WELDMENT	1
3	64477	IMPELLER MOUNT PLATE	1
4	64414	EXHAUST GRILL	1
5	64417	ACCESS PANNEL	2
6	64418	MOUNTING CLIP, LEFT	1
7	64419	MOUNTING CLIP, RIGHT	1
8	64412	IMPELLER SCROLL	1
9	64420	HYD. RELEASE DOOR	1
10	64421	SENSOR GUARD	1
11	64422	REMOVABLE WORK SURFACE	2
12	97194	QUICK LOCK RETAINER	2
13	97195	QUICK LOCK MALE	2
14	97196	QUICK LOCK RECEPTACLE	2
15	97197	DRAW LATCH	3
16	98426	ADHESIVE LABEL, 3 PHASE	1
17	98422	ADHESIVE LABEL, 230VOLTS	1
18	65059	DESCRIPTIVE PLATE, ELECTRICAL DATA	1
19	97102	WARNING LABEL, MAGNESIUM	1
20	64930	WARNING LABEL, EYE PROTECTION	1
21	66084	DESCRIPTION PLATE, COMPANY LOGO	1
22	97201	DIN TERMINAL BLOCK, WHITE	5
23	98609	RING TERMINAL	3
24	97351	22MM PILOT LIGHT, GREEN	1
25	97190	JUMPER	2
26	97181	FUSE BLOCK, 24V/INDICATOR	1
27	97183	250v, 5MM X 20 MM FAST ACTING FUSE, 250V	1
28	97193	Switch Label Plate, "RESET"	1
29	97186	PILOT LIGHT	1
30	97352	CORD, 12/4 SEOOW	1
31	97185	TURN-LOCK DEVICE NEMA L15-20, MALE PLUG, 250 VAC, 20 Amp	1
32	97353	90 DEGREE ELBOW	1
33	97354	1/2" LOCK NUT	1
34	97356	1/2" SEALING RING	1
35	97189	WIRE RACEWAY, 10"	2
36	97200	Liquid Level Sensor	2
37	64427	SENSOR PLATE	1
38	97187	PB, 22MM, PLASTIC, YEL, LED ILLUM, 24V, FLUSH, 1 N.O.	1
39	97202	DIN TERMINAL BLOCK, BLACK	9
40	97386	RUBBER WASHER	1
41	98701	.187-.312 ALUM. STRAIN RELIEF	2
42	98751	1/2" SEALING RING	5
43	98746	1/2" LOCK NUT	4
44	97385	SOLENOID VALVE	1
45	97391	AUXILARY CONTACT	1
46	97390	END CAP	3
47	97205	DIN RAIL STOP	5
48	97393	MOTOR CONTACT	1
49	97394	SMART RELAY	1
50	97395	DR-60 TRANSFORMER	1
51	97396	OVERLOAD RELAY	1
52	97398	DISCONNECT ARM	1
53	97188	PB, 22mm, PLASTIC, 2-WAY, W/SYMBOLS, 1 N.O., 1 N.C	1
54	97219	FUSED DISCONNECT	1
55	64428	SENSOR PLATE, GASKET	1
56	97233	WORK SURF GASKET, SHORT	2
57	97232	WORK SURF GASKET, LONG	2
58	97235	ACCESS PANEL GASKET	2
59	97199	CONTROL BOX GASKET	1
60	64423	MIST TRAP	2
61	64415	CASTER MOUNTING PLATE, EXTENDED	2
62	64416	CASTER MOUNTING PLATE	2
63	95208	3/8-16 x 1" HEX HEAD BOLT	16
64	95043	3/8 FLAT WASHER, ZINC	38
65	97300	LOCK DOWN COMFORT GRIP, 1/2-13 x 3" dia	2
66	97299	BOLT DOWN SWIVEL MOUNT	2
67	97297	RIGID CASTER	2
68	97298	SWIVEL CASTER	2
69	97241	1/4-20 X 1" BHSCS	12
70	97372	#14 WASHER/ NEOPRENE BACKING	12
71	97314	.281 ID X 1" OD X .080 THK FENDER WASHER	14
72	97381	1/4-20 SS LOCK NUT	14
73	97325	#10 External Star Washer	13
74	98620	10-32 x 3/8" HEX HEAD SCREW	5
75	97213	10-32 HEX NUT	7
76	97192	1/4-20 x 1/2" BHMS/INTERNAL LOCK WASHER	17
77	95182	3/8-16 x 5/8" HEX HEAD BOLT, ZINC	22
78	97303	6-32 x 3/8 BHSCS, Zinc Plated	12
79	97239	10-32 X 1/2 FSHCS	4
80	97306	1/8" ALUMINUM BLIND POP RIVET	16
81	97307	1/4-20 x 1/4" BHCS	4
82	97146	1/4-20 x 3/8" BHCS	16

BILL OF MATERIALS

ITEM	P/N	DESCRIPTION	Qty
83	97313	BULKHEAD, 1/4 NPT X 1/4 NPT	1
84	68022	QUICK CONNECT, 3/8 OD TUBE X 1/4" NPT	1
85	64430-01	3/8 OD TUBE	1
86	97332	QUICK CONNECT 90°, 3/8 OD TUBE X 1/4" NPT	1
87	97333	REDUCER, 1/2 NPT MALE TO 1/4 NPT MALE	1
88	98512	Hex Head Cap Screw 5/8"-11	12
89	98514	Flat Washer SAE, 5/8"	29
90	97236	Thin Hex Locknut Zinc-Plated, 5/8"-11 Thread	13
91	98516	Socket Head Cap Screw 3/8"-16 Thread, 1-1/4"	4
92	98517	HHCS 5/8"-11 Thread, 8-1/2" Length	1
93	98934	X0032 EP MOTOR, 3HP, 3600 RPM	1
94	98932	MOTOR PULLEY	1
95	64459	MOTOR MOUNT PLATE	1
96	64455	MOTOR SWIVEL PLATE	1
97	98511	.25 X .25 X 1.25 SQ.KEY	2
98	98929	IMPELLER INLET RING	1
99	64454	MAIN MOTOR SUPPORT	1
100	64460	PULLEY GUARD	1
101	64476	PULLEY GUARD COVER	1
102	68015	WEATHERPROOF J-BOX, SINGLE DEVICE	1
103	97360	3/4" FEMALE GHT TO 1/4" MALE NPT SWIVEL	1
104	98518	PRESSURE SWITCH	1
105	98700	STRAIN RELIEF	1
106	64399	Lower Bearing Arm	1
107	98931	ER Bearing	2
108	64439	1" Drive Shaft	1
109	64499	BEARING SUPPORT HUB	2
110	98933	DRIVE PULLEY	1
111	98928	IMPELLER	1
112	98520	SHCS 1/4"-20 Thread, 1-1/4" Length	4
113	97673	10-32 x 1/2" BHSCS	4
114	95183	5/16 WASHER	13
115	95044	3/8 LOCK WASHER	6
116	98521	HHCS 3/8"-16 Thread, 1-1/2" Length	4
117	97460	CHAMFER KEY	1
118	98522	Through-Wall Cplg for 1/2" Tube OD X 1/2" NPT	2
119	98527	RESIDUAL CURRENT DEVICE	1
120	97367	FUSE HOLDER	2
121	98930	SPLIT TAPER BUSHING	1
122	98935	PULLEY BELT	1
123	98936	1/2" SEALING RING	3
124	98943	45 DEGREE ELBOW	1
125	98937	90 DEGREE ELBOW	1
126	98938	ENY SEALING FITTING	1
127	98939	3/4 x 1 3/8" NPT NIPPLE	1
128	98942	Liquid Tight Conduit Fitting, Straight	1
129	98519	SINGLE DEVICE COVER	1
130	98941	DAM PACKING FIBER	1
131	98940	SEALING COMPOUND	1
132	98944	3/4" CONDUIT	1
133	98403	1/2" CONDUIT	1
134	98534	.50 NPT QUICK CONNECT, 90 DEG SWIV.	2
135	98533	.50 NPT BREATHER VENT	1
136	98525	COIL CONNECTOR	1
137	64388	BRACKET	1
138	95206	3/8-16 x 5/8" HEX HEAD BOLT, ZINC	2
139	97127	Nylon-Insert Hex Locknut 5/16"-24	3
140	97033	Hex Head Cap Screw 5/16"-24 Thread, 2-1/4"	3
141	98725	1/2" STRAIGHT CONDUIT CONNECT	2
142	97426	CONDUIT MOUNT, CLIC	1
143	97429	External-Tooth Lock Washer 1"	2
144	97366	FUSE	2
145	97379	10-32 x 3/4" BHSCS	1
146	97361	1/2" AIR LINE	1
147	97430	.187-.312 ALUM. STRAIN RELIEF	1
148	98523	3-WAY SOLENOID VALVE	1
149	64496	LEFT SIDE SHIELD	1
150	64497	RIGHT SIDE SHIELD	1
151	64498	BACK SHIELD	1
152	97178	600V, 20A, CLASS EDCC	3
153	64920	BUMPER	1
154	97392	35mm DIN RAIL	2
155	97399	DISCONNECT LEVER	1
156	98611	WIRE TERMINAL	3
157	64961	ASSY KNOBS- REID# DK-127 (OPT.)	10
158	97217	3/8" HEX NUT	6
159	95935	1/4" WASHER	2
160	95186	1/4-20 HEX NUT	1

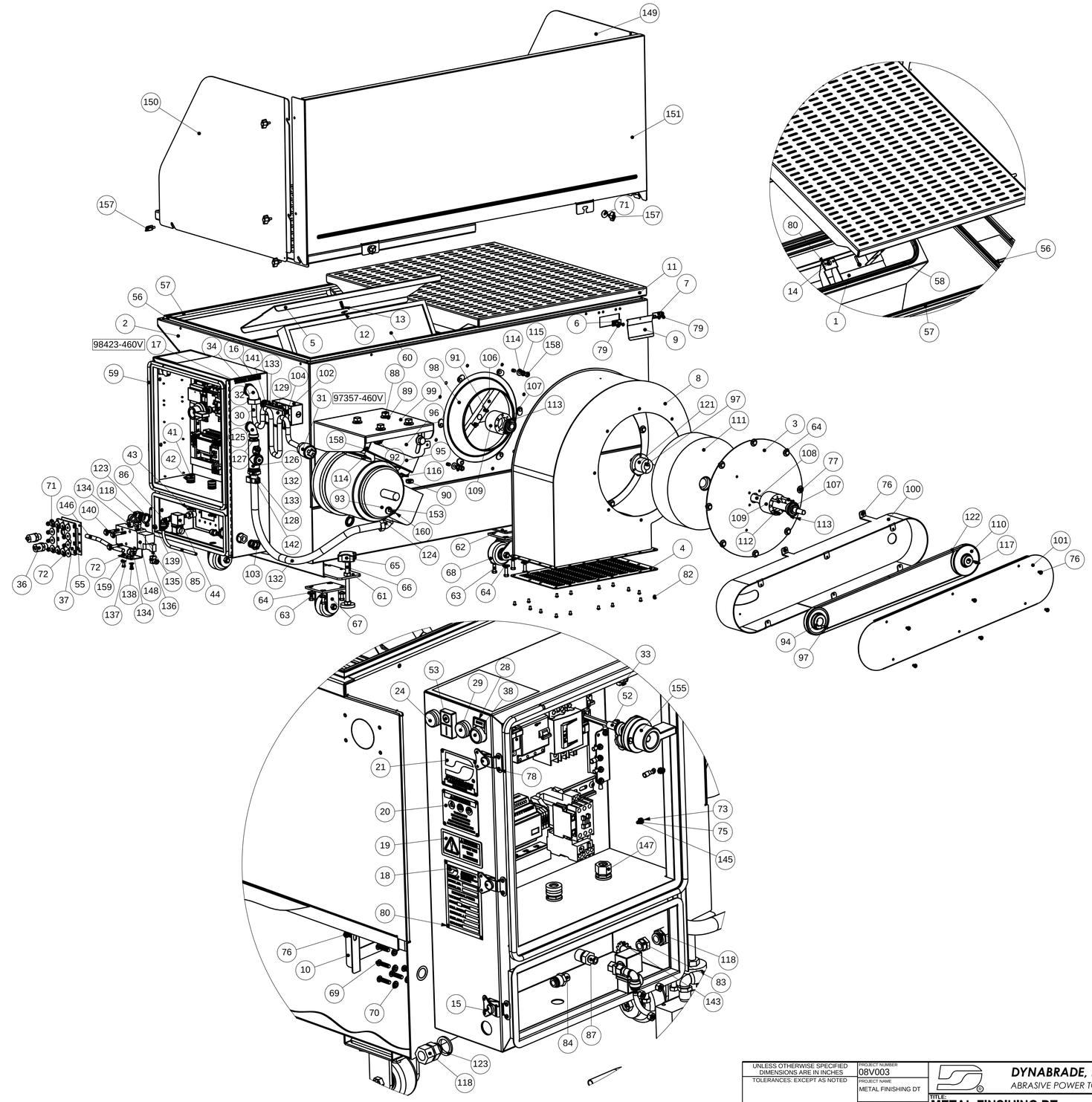

F	ECN	DATE	DRW	CHK'D	APPR	DESCRIPTION

REVISIONS

FN 11 30-OCT-09

UNLESS OTHERWISE SPECIFIED DIMENSIONS ARE IN INCHES
TOLERANCES: EXCEPT AS NOTED

BREAK ALL SHARP EDGES 0.004 TO 0.016 R/C
MACHINED SURFACES 63 µ
FINISH OR BETTER UNLESS SPECIFIED

DRAWING CONFORMS WITH ASME Y14.5M - 1994

PROJECT NUMBER: 08V003
PROJECT NAME: METAL FINISHING DT
DRAWN: SRB DATE: 12/15/2009
CHECKED DATE
APPROVED DATE
SCALE: 1:6

DYNABRADE, INC.
ABRASIVE POWER TOOLS

TITLE: **METAL FINSIHING DT**
MATERIAL: GALVANEAL 90
FINISH: PC SUPPLIER TCI: RB-5846-4 DYNABRADE TEAL
SHEET 1 OF 2 | SIZE D | DRAWING NUMBER **64400-00** | REV **F**

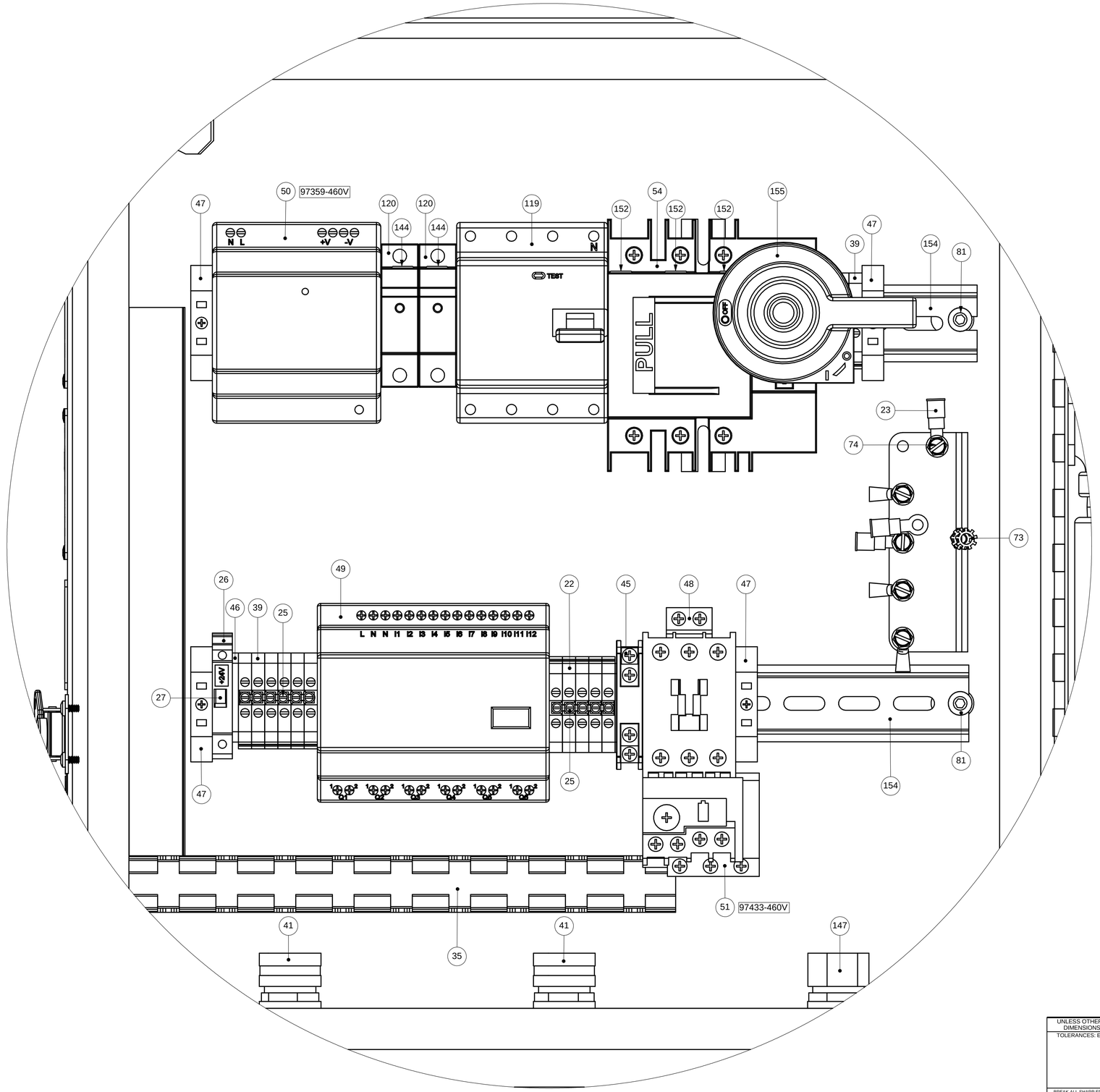

UNLESS OTHERWISE SPECIFIED DIMENSIONS ARE IN INCHES TOLERANCES: EXCEPT AS NOTED	PROJECT NUMBER 08V003 PROJECT NAME METAL FINISHING DT	**DYNABRADE, INC.** *ABRASIVE POWER TOOLS*
	DRAWN SRB DATE 12/15/2009 CHECKED DATE	TITLE: **METAL FINSIHING DT** MATERIAL: GALVANEAL 90 FINISH: PC SUPPLIER TCI: RB-5846-4 DYNABRADE TEAL
BREAK ALL SHARP EDGES 0.004 TO 0.016 R/C MACHINED SURFACES 63 µ FINISH OR BETTER UNLESS SPECIFIED	APPROVED DATE SCALE 1:6	SHEET 2 OF 2 · SIZE **D** · DRAWING NUMBER **64400-00** · REV **F**
DRAWING CONFORMS WITH ASME Y14.5M - 1994		

FN 11 30-OCT-09